Design Requirement of #2 and #3 Chicane Magnets

#2 --- Bo=3.0 kG

B (foil) = 2.5 kG > B(bottom); $\tan^{-1}(Bz/By)$ >>65 mrd

Gap = 23.5 cm (8.750 inch)

#3 --- Bo = 2.4 kG (must smaller than 2.5 kG)

Distance (center to center) = 181.4 cm (71.42 inch)

Field Integrals from $-\infty$ to foil = 237.6 kG-cm

from foil to $+\infty$ = 261.4 kG-cm

two C magnets = 499 kG-cm, to 0.5e-4 (R=7cm)

#2 and #3 C magnets (with coils)

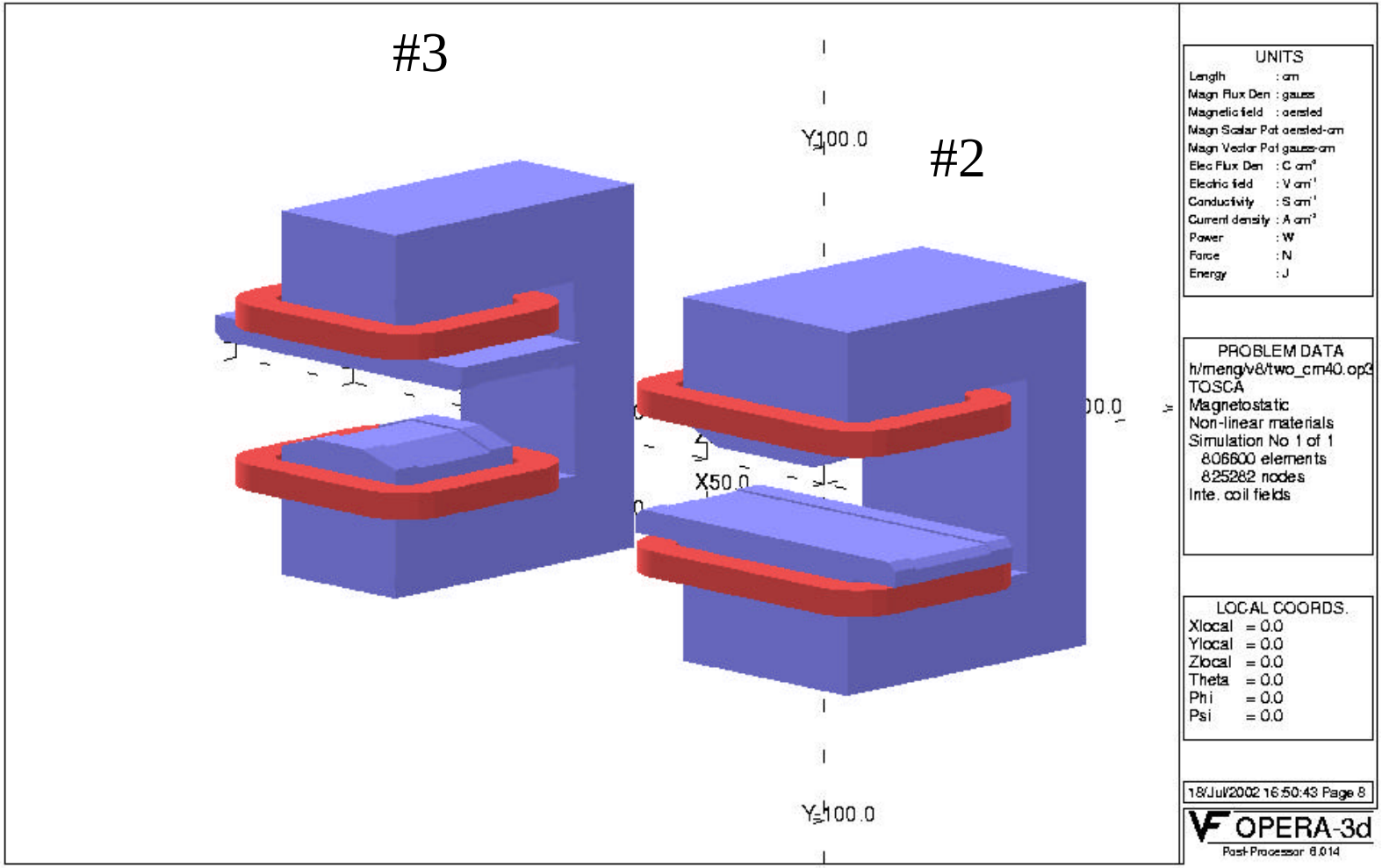

#2 and #3 C magnets (without coils)

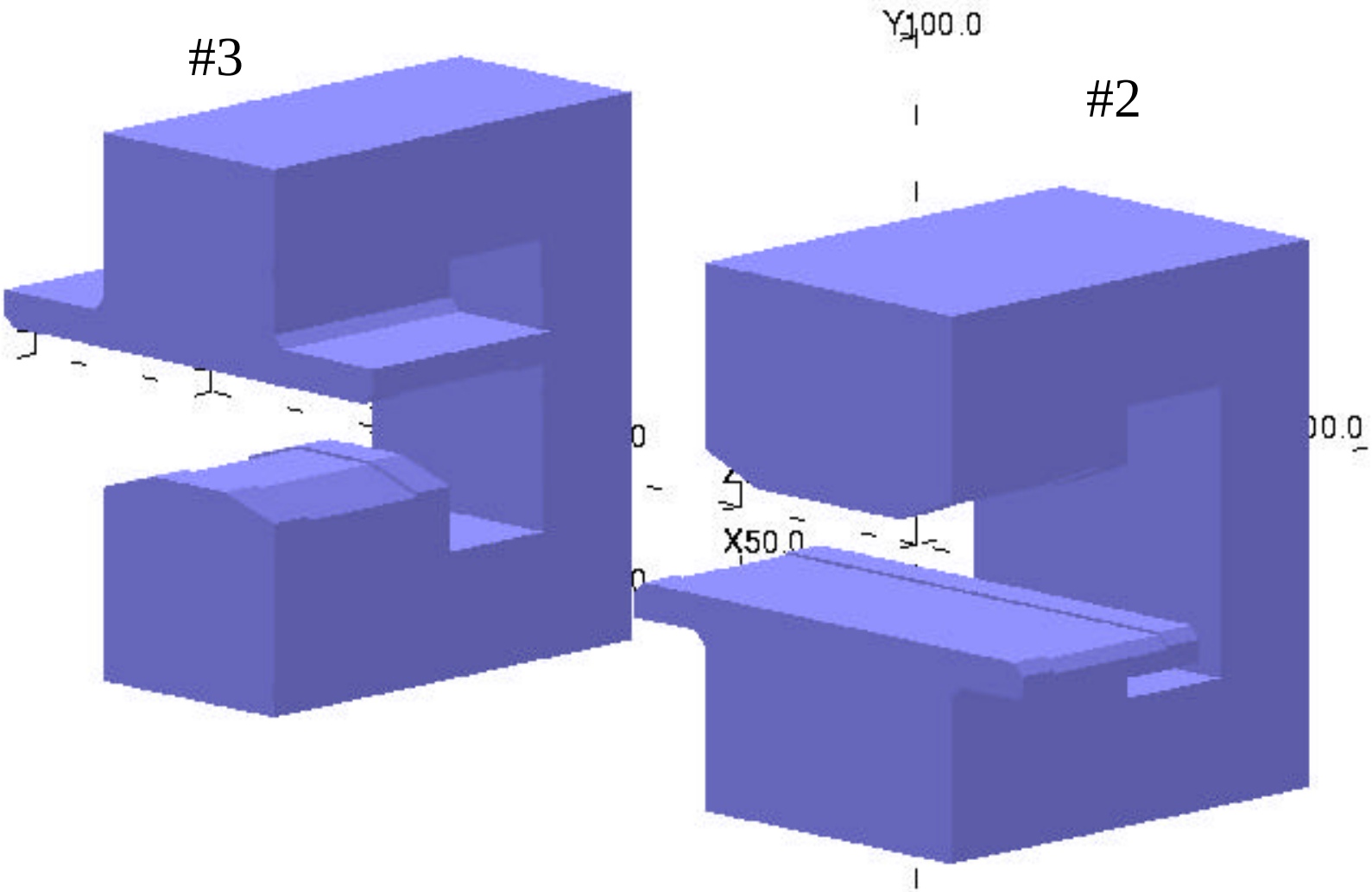

- Total Integral along 0, 90, 180, 270 degree lines

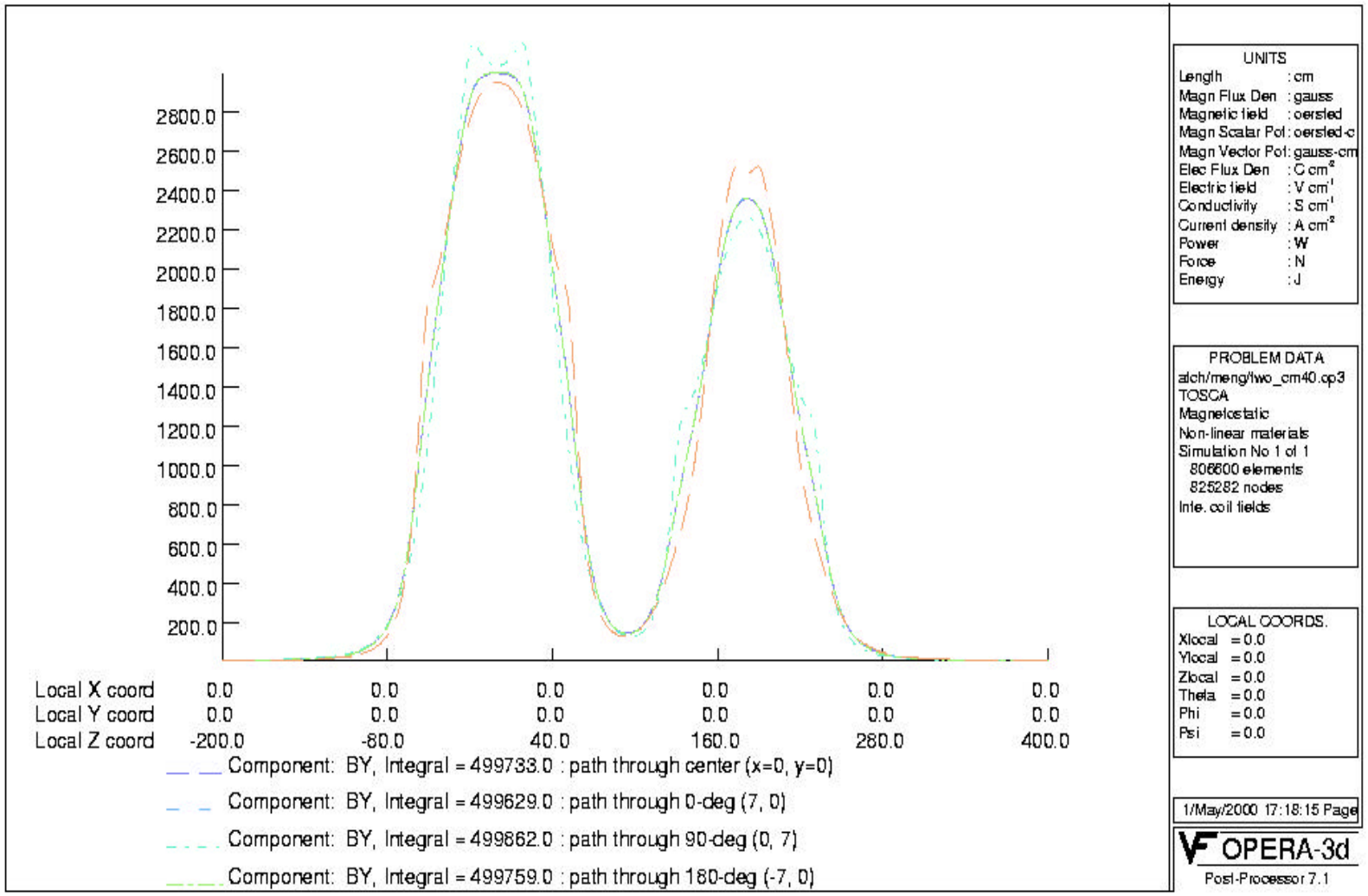

- Total Integral along 45, 135, 225, 315 degree lines

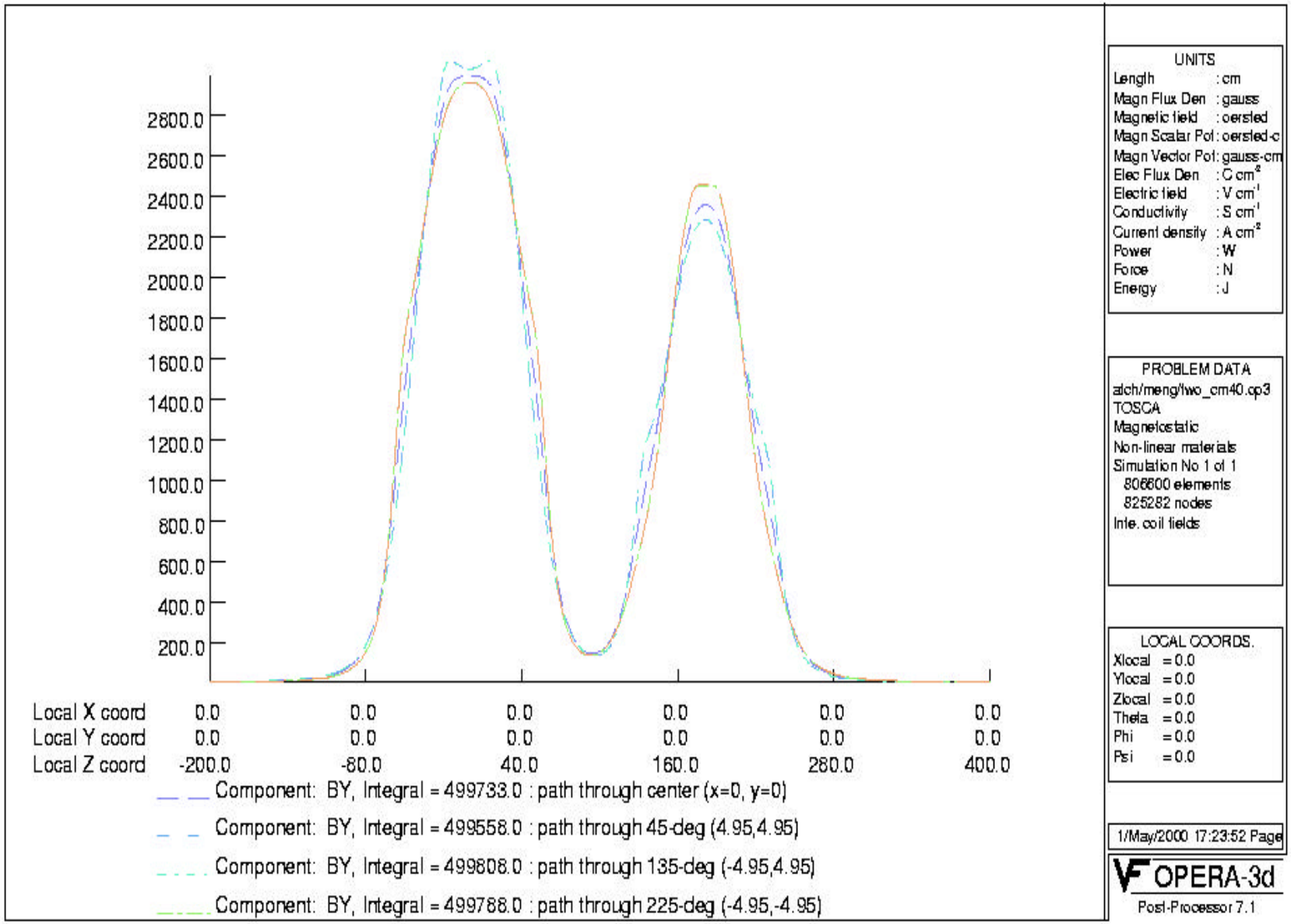

Parameters

- Foil Location (0, 2, 30.7 cm)

  By = 2.50 kG; Bz = -0.532 kG; |B|=2.556 kG

  $\tan^{-1}(Bz/By) = 0.2$ rad

Bottom pole B = 2.475 kG near the foil

- Field Integrals from -∞ to foil = 237997 g-cm

  from foil to +∞ = 261751g-cm

Total Integral C magnets = 499712.5 g-cm ±3.2e-4 (R=7cm)

Operation current: #2 I = 2168 A, N = 14 turn (per pole)

#3 I = 1716 A, N = 14 turn (per pole)

Integrated Multipoles
(R=8 cm; z from –200 to 400 cm)

n	Int (bn) (g-cm)	Int (bn)/(b1) (ratio)	Int (an) (g-cm)	Int (an)/(b1) (ratio)
1	4.99742e+05	1.00000e+00	0.00000	0.00000
2	-1.35119e+02	-2.70378e-04	6.40919e+00	1.28250e-05
3	-9.05941e+01	-1.81282e-04	-5.27759e+00	-1.05606e-05
4	7.11133e+01	1.42300e-04	-2.35036e+00	-4.70315e-06
5	8.88407e+01	1.77773e-04	-2.05767e-01	-4.11747e-07
6	8.62674e+00	1.72624e-05	4.75541e+00	9.51574e-06