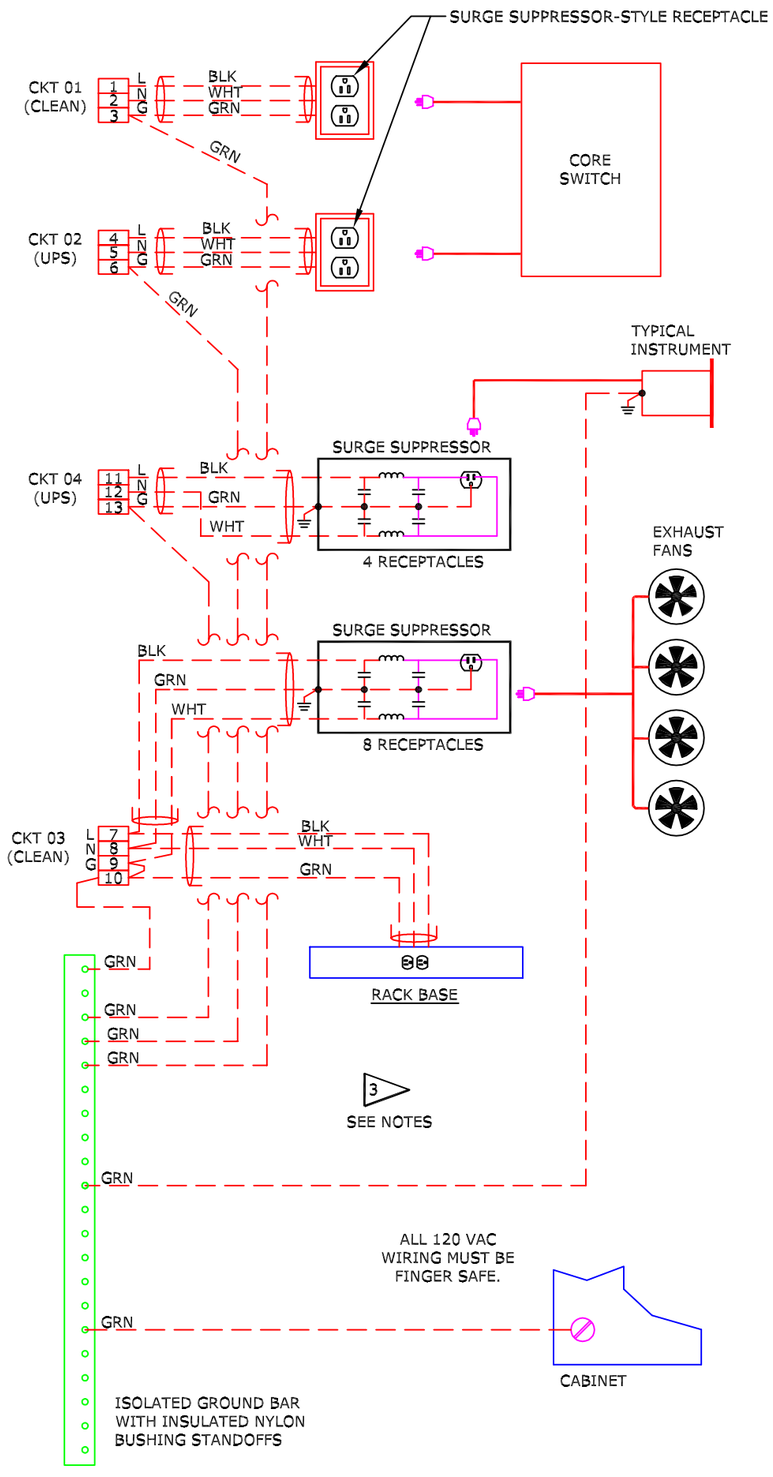

DETAIL "E"
POWER WIRING DIAGRAM

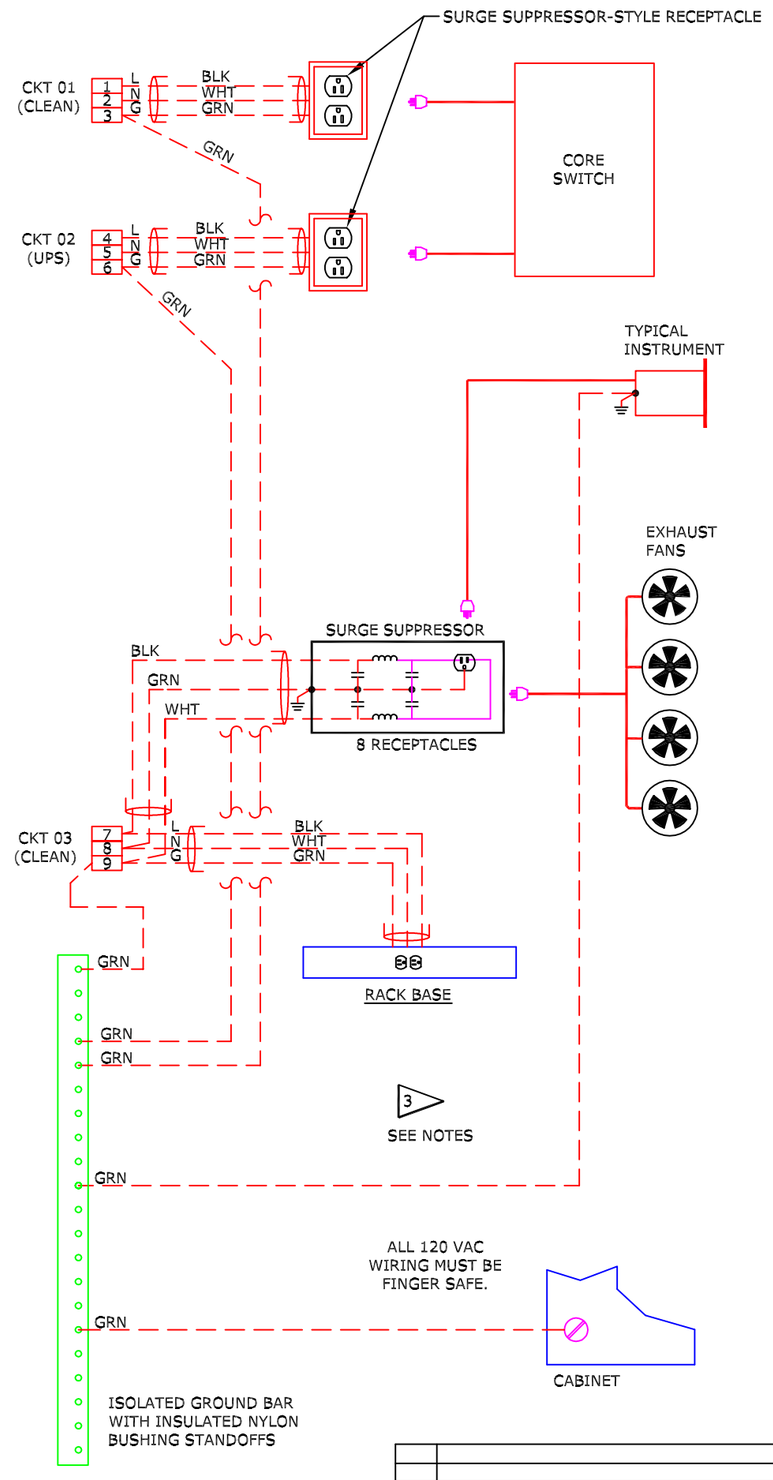

DETAIL "F"
POWER WIRING DIAGRAM

DETAIL "G" - BILL OF MATERIAL

	ITEM	QTY	DESCRIPTION	PART NUMBER
2	1	1	PHOENIX RECEPTACLE BOX, DIN RAIL MOUNT, EMDUO 120/15, PHOENIX CONTACT	5600461
4 2	2	1	DUPLEX RECEPTACLE WITH SURGE AND NOISE SUPPRESSION, WIREMOLD	53SR20-BL

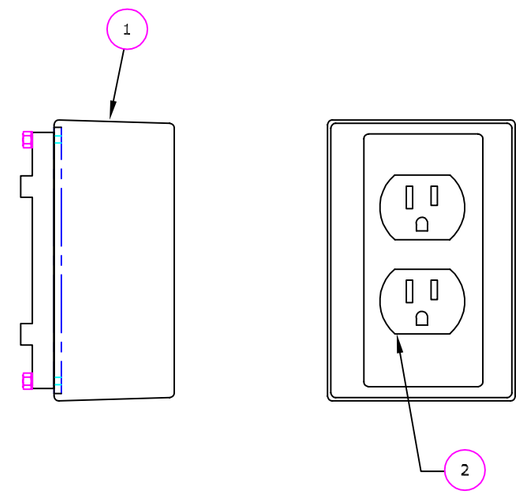

DETAIL "G"
REPLACING RECEPTACLE

NOTES:

1. PANEL FABRICATOR SHALL PROVIDE ALL MISC. HARDWARE REQUIRED TO ASSEMBLE INCLUDING DIN RAILS, PANDUIT, END CLAMPS, TERMINAL IDENTIFICATION NUMBERS, UNISTRUT AND ASSOCIATED SPRING NUTS, ETC...
2. ITEMS TO BE PROCURED AND SUPPLIED BY PANEL FABRICATOR.
3. POWER WIRING TO BE #12 AWG TYPE "TC" CABLE. GROUND WIRES TO BE #12AWG 75° COPPER.
4. REPLACE RECEPTACLE PROVIDED WITH SURGE SUPPRESSOR RECEPTACLE, WIREMOLD 53SR20-BL.

LEGEND:

- - - - - - - - RACK FABRICATOR WIRING.

2.18.02

REV	DESCRIPTION	BY	CHK	SECT	DEPT	DATE
0	ISSUED FOR CONSTRUCTION	BD				2.05.02

REVISION OR ISSUE PURPOSE — REVISION APPROVALS

DRAWING APPROVALS		DATE
DES	BILL DEVAN	2.05.02
DWN	JUNE SAFIEH	2.05.02
CHK		
L3TL		
LE		
STL		

Oak Ridge National Laboratory
SNS Spallation Neutron Source

ICS RACK FABRICATION DETAILS "E" THRU "G"

DRAWING NUMBER 109020000-R8D-8000-F004 REV 0