Brian Oerter, Brookhaven National Lab 12/13/99 11:34 AM New SNS Block Diagram.dwg

| SIGNAL NAME | DESCRIPTION |
|---|---|
| TZ | 'TIME = 0'; LINE SYNCH CYCLE-START TRIGGER |
| STA | START ACCUMULATION OF BEAM IN RING |
| STP | STOP ACCUMULATION OF BEAM IN RING |
| SEW | START EXTRACTION WINDOW |
| EXT | EXTRACT BEAM FROM RING |
| ABO | ABORT THIS MACROPULSE |

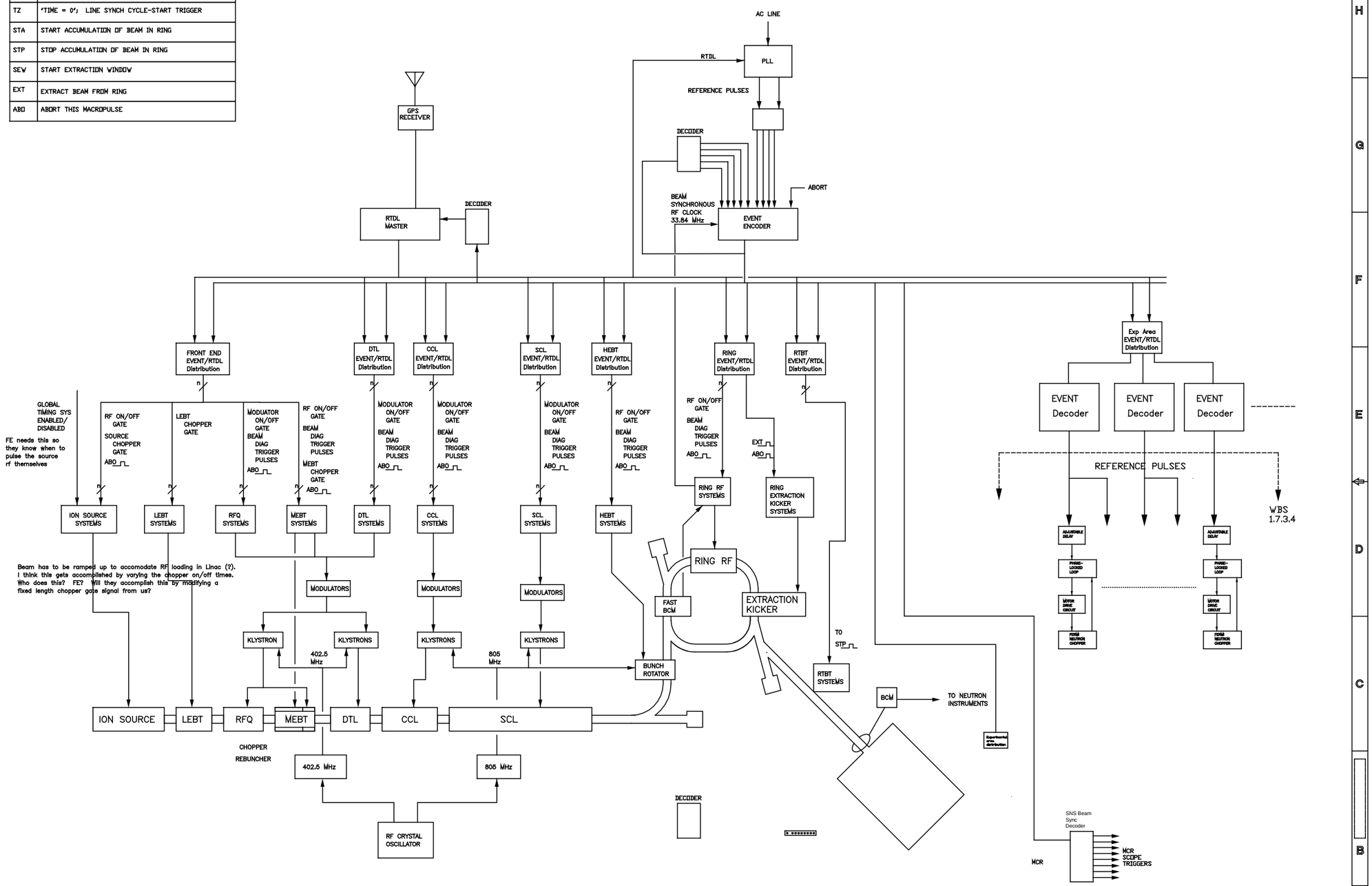


NO REPRESENTATION OR WARRANTY, EXPRESSED OR IMPLIED, IS MADE AS TO THE ACCURACY, COMPLETENESS OR USEFULNESS OF THE INFORMATION OR STATEMENTS CONTAINED IN THESE DRAWINGS, OR THAT THE USE OR DISCLOSURE OF ANY INFORMATION, APPARATUS, METHOD, OR PROCESS DISCLOSED IN THESE DRAWINGS MAY NOT INFRINGE PRIVATE RIGHTS OF OTHERS. NO LIABILITY IS ASSUMED WITH RESPECT TO THE USE OF, OR FOR DAMAGES RESULTING FROM THE USE OF ANY INFORMATION, APPARATUS, METHOD, OR PROCESS DISCLOSED IN THESE DRAWINGS. DRAWINGS MADE AVAILABLE FOR INFORMATION TO DESIGN ARE TO BE USED FOR OTHER PURPOSES AND ARE TO BE RETURNED UPON REQUEST OF THE FORWARDING CONTRACTOR.

NUMBER OF SECTION OR DETAIL
DRAWING ON WHICH SECTION OR DETAIL IS TAKEN
DRAWING ON WHICH SECTION OR DETAIL IS SHOWN
SECTION AND DETAIL KEY

THIS DOCUMENT CONTROLLED BY
CHANGE CONTROL SYSTEM
ENGINEERING PROCEDURE

| REV | WORK ORDER | DATE | DRAWN BY | DESCRIPTION | BY | CHK | SECT | DEPT | DATE | PE | REQ | DATE | LNCS | DATE | RPE | RPE NO | DATE | ST | CV | EC | EE | EM | IE | M | PS | SE | AR |
|---|---|---|---|---|---|---|---|---|---|---|---|---|---|---|---|---|---|---|---|---|---|---|---|---|---|---|---|
| | | | | REVISION OR ISSUE PURPOSE | | | | | | | | REVISION APPROVALS | | | | | | | | | | | SQUAD CHECK | | | | |

| REV. | DATE | DRAWING APPROVALS |
|---|---|---|
| | | RPE |
| | | DSGN |
| | | DRW |
| | | CHKR |
| | | SECT |
| | | DEPT |
| | | PE |
| | | PJ |
| | | REQ |
| | | LNCS |

LOCKHEED MARTIN
LOCKHEED MARTIN ENERGY SYSTEMS, INC.
managed for the DEPARTMENT OF ENERGY under
U.S. GOVERNMENT contracts DE-AC-05-84OR21400 and DE-AC-05-76OR00033
Oak Ridge, Tennessee • Paducah, Ky • Portsmouth, Ohio

PROJECT NAME:

ICS TIMING SYSTEM
BLOCK DIAGRAM

| 1 | 48 | 49 | 50 | PLANT | BLDG | FL | SH. | DF | TYPE | CLASS |
|---|---|---|---|---|---|---|---|---|---|---|
| | 51 | | 52 | 53 | | | | | | REV |

A

$DATE= $TIME=
$FILE=

Seed Date: Feb 1, '97
Border Date: Dec 1, '97