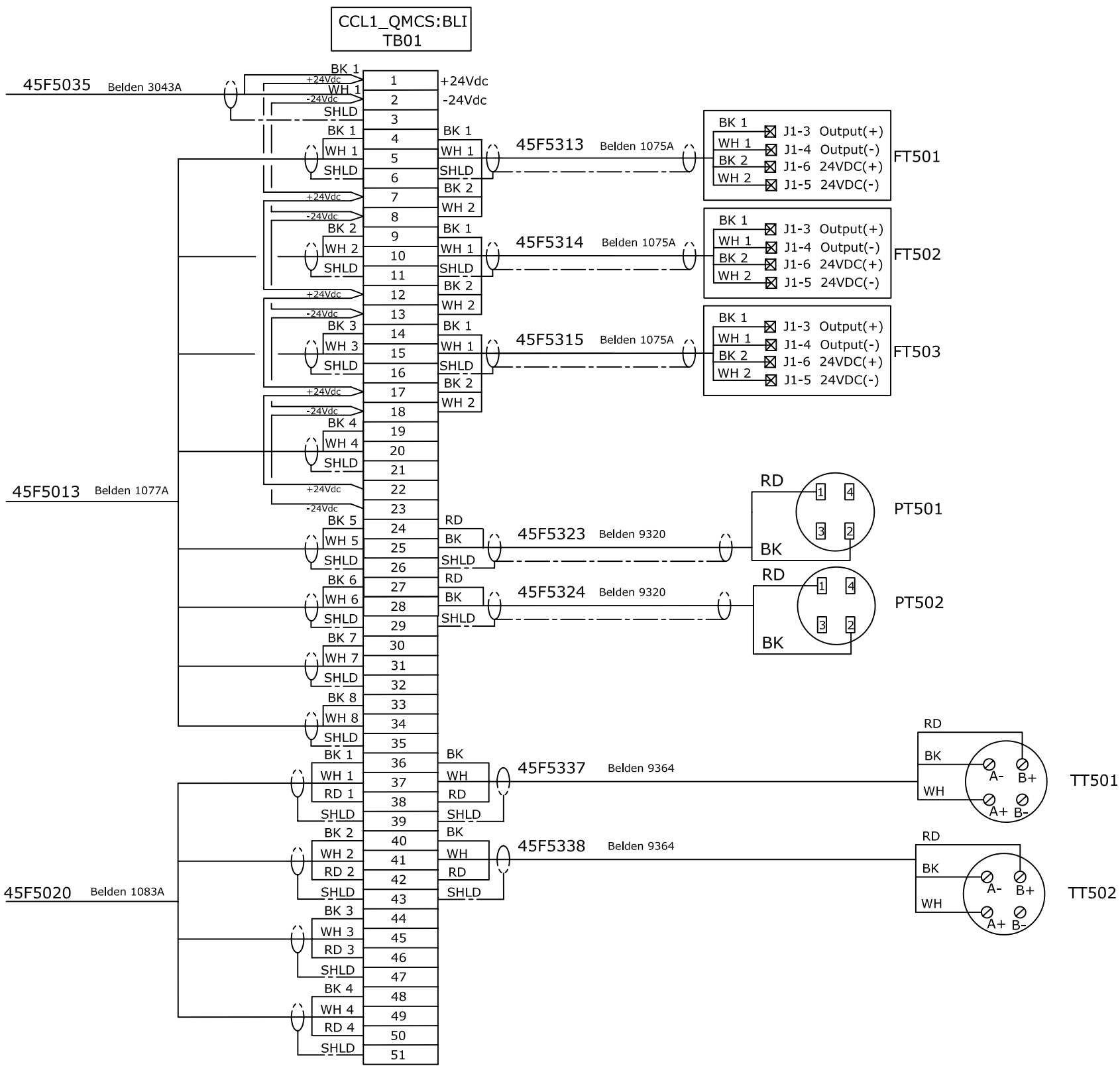

REV	DESCRIPTION	REVISION OR ISSUE PURPOSE
A	PRELIMINARY	

REVISION APPROVALS	BY	CHK	SECT	DEPT	DATE
	XXX	___	___	___	XX/XX/XX

DRAWING APPROVALS		DATE
DES	DERRICK WILLIAMS	11/21/03
DWN	DERRICK WILLIAMS	11/21/03
CHK		
L3TL		
LE		
STL		

Oak Ridge National Laboratory
operated by UT-Battelle, LLC for the UNITED STATES DEPARTMENT OF ENERGY under contract DE-AC05-00OR22725
Oak Ridge, Tennessee 37830-8050

SNS Spallation Neutron Source

CCL1 QMCS CONTROL WIRING
BEAM LINE INTERFACE TB01

DRAWING NUMBER
109040000R8U8300W014

REV 0