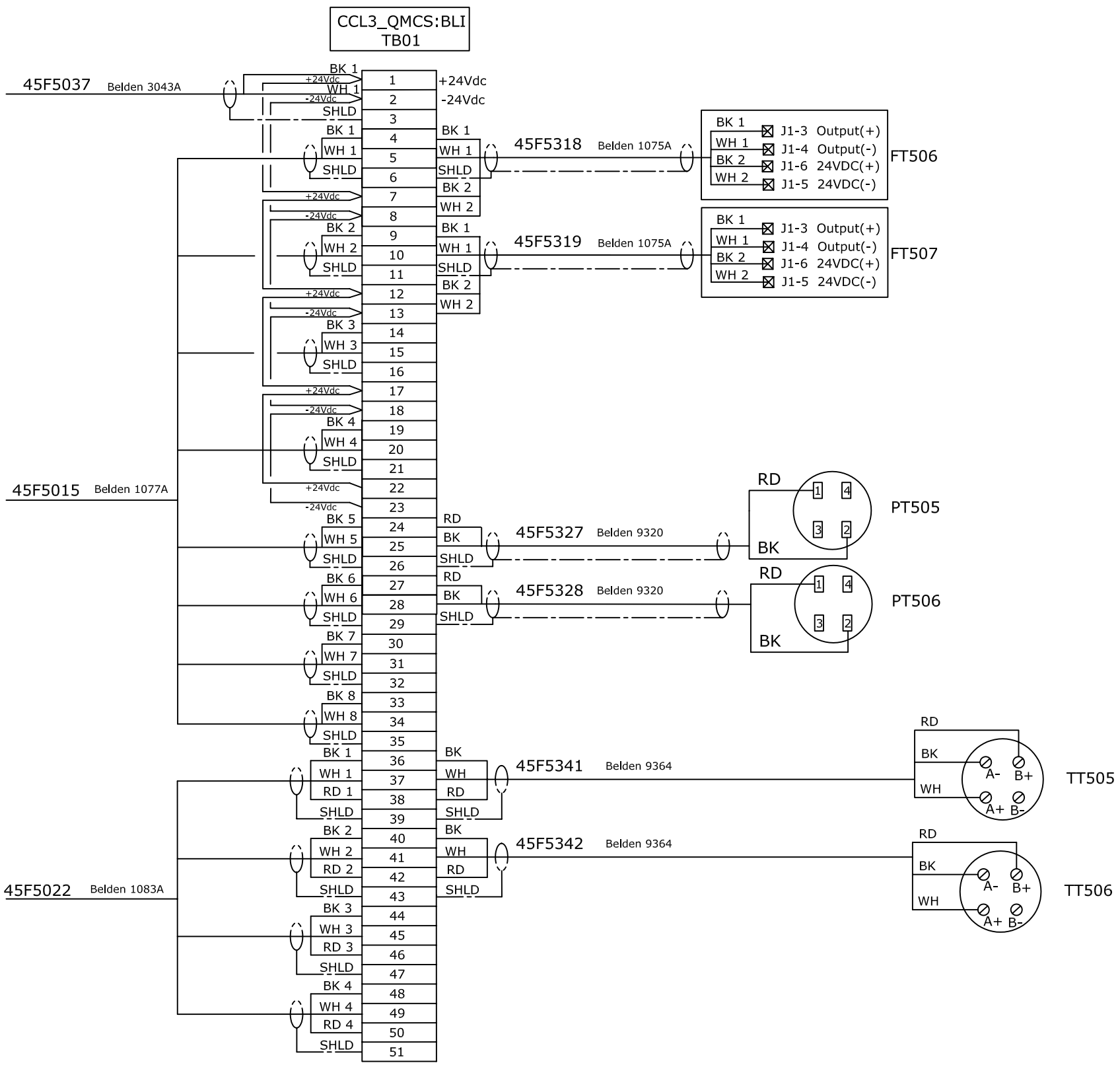

REV	DESCRIPTION	REVISION OR ISSUE PURPOSE
A	PRELIMINARY	

REVISION APPROVALS				
BY	CHK	SECT	DEPT	DATE
XXX	___	___	___	XX/XX/XX

DRAWING APPROVALS			
	DES	DERRICK WILLIAMS	11/21/03
	DWN	DERRICK WILLIAMS	11/21/03
	CHK		
	L3TL		
	LE		
	STL		

DATE

Oak Ridge National Laboratory
operated by UT-Battelle, LLC for the U.S. DEPARTMENT OF ENERGY under contract DE-AC05-00OR22725
Oak Ridge, Tennessee 37830-8050

SNS Spallation Neutron Source

CCL3 QMCS CONTROL WIRING
BEAM LINE INTERFACE TB01

DRAWING NUMBER
109040000R8U8300W016

REV
0