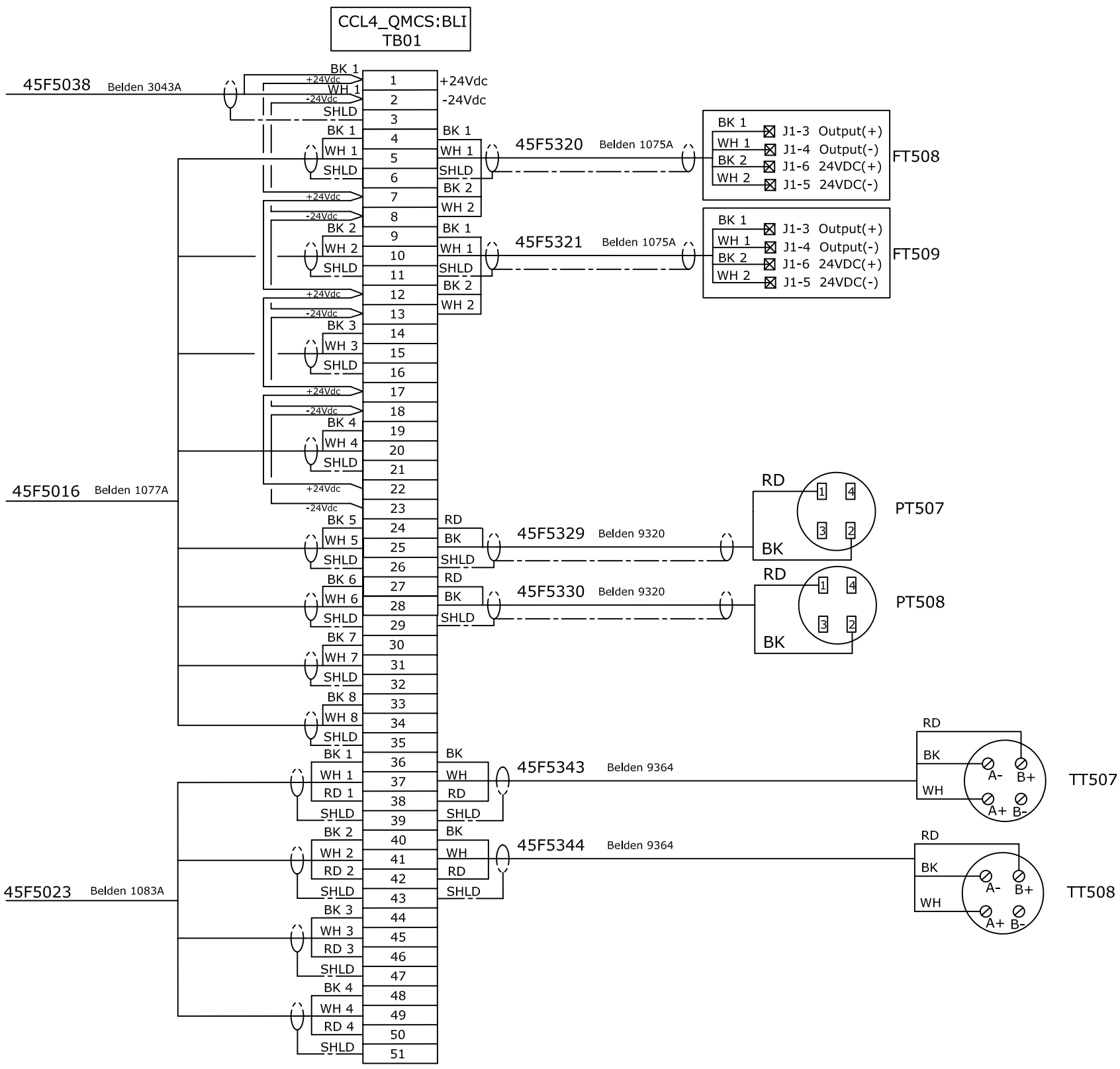


| REV | DESCRIPTION | BY | CHK | SECT | DEPT | DATE | DES | DWN | CHK | STL | LE | DATE |
|---|---|---|---|---|---|---|---|---|---|---|---|---|
| A | PRELIMINARY | XXX | ___ | ___ | ___ | XX/XX/XX | DERRICK WILLIAMS | DERRICK WILLIAMS | | | L3TL | 11/21/03 |
| REVISION OR ISSUE PURPOSE | | REVISION APPROVALS | | | | | DRAWING APPROVALS | | | | | DATE |

Oak Ridge National Laboratory
operated by UT-Battelle, LLC for the U.S. DEPARTMENT OF ENERGY under contract DE-AC05-00OR22725
Oak Ridge, Tennessee

SNS Spallation Neutron Source

CCL4 QMCS CONTROL WIRING
BEAM LINE INTERFACE TB01

DRAWING NUMBER
109040000R8U8300W017

REV
0