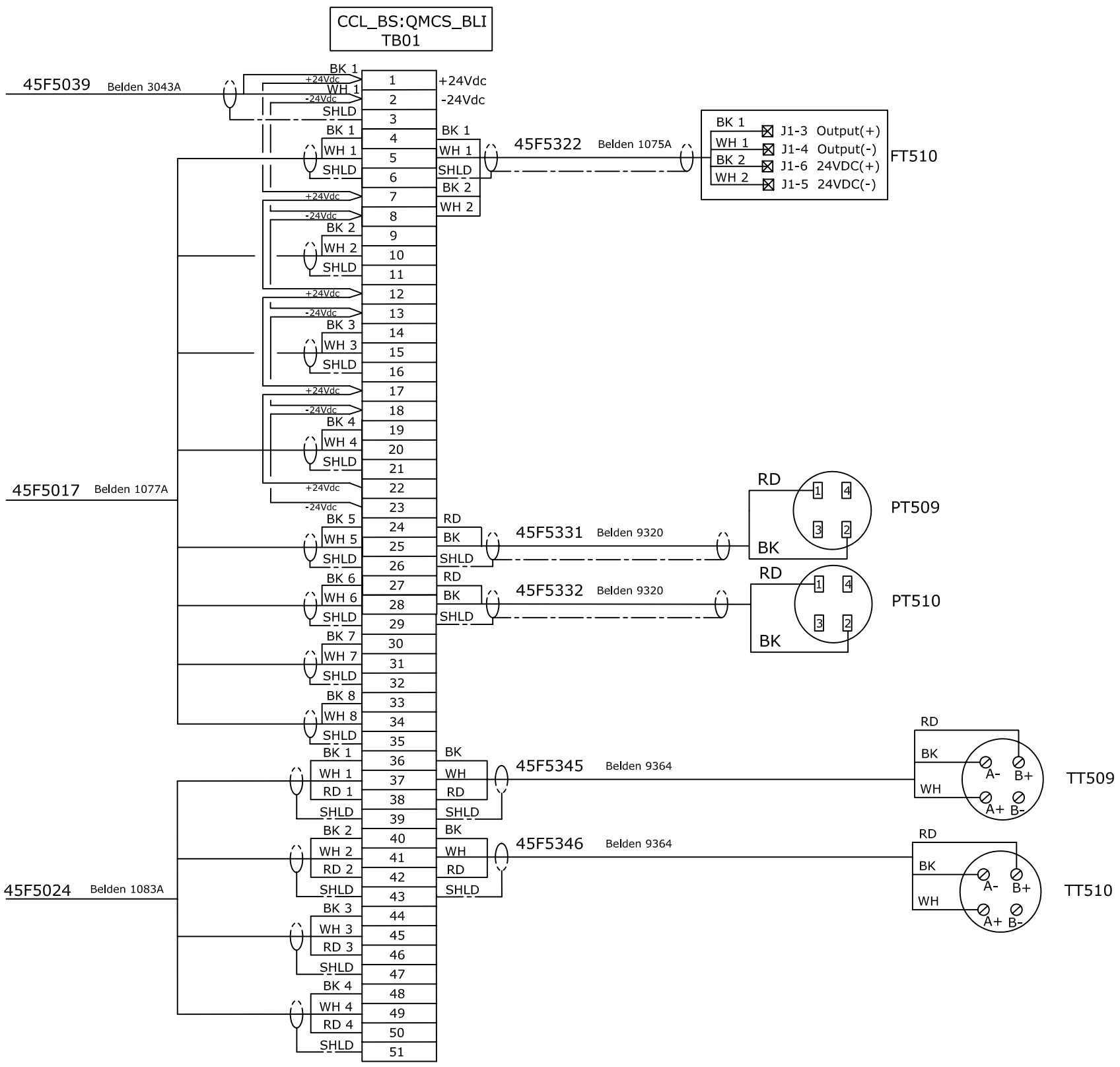

REV	DESCRIPTION	REVISION OR ISSUE PURPOSE
A	PRELIMINARY	

REVISION APPROVALS				
BY	CHK	SECT	DEPT	DATE
XXX	___	___	___	XX/XX/XX

DRAWING APPROVALS			
			DATE
DES	DERRICK WILLIAMS		11/21/03
DWN	DERRICK WILLIAMS		11/21/03
CHK			
L3TL			
LE			
STL			

Oak Ridge National Laboratory
UT-Battelle, LLC
Operated for the DEPARTMENT OF ENERGY
Oak Ridge, Tennessee

SNS Spallation Neutron Source

CCL BEAM STOP QMCS CONTROL WIRING
BEAM LINE INTERFACE TB01

DRAWING NUMBER
109040000R8U8300W018

REV 0