SNS 108050000-DC0002-R00

Spallation Neutron Source

Conventional Facilities Controls Site Communications Backbone Design Criteria

February 2002

DRAFT 2/22/02

A U.S. Department of Energy Multilaboratory Project

SPALLATION NEUTRON SOURCE

Argonne National Laboratory • Brookhaven National Laboratory • Thomas Jefferson National Accelerator Facility • Lawrence Berkeley National Laboratory • Los Alamos National Laboratory • Oak Ridge National Laboratory

SNS

SNS 108050000-DC0002-R00

SPALLATION NEUTRON SOURCE
SITE COMMUNICATIONS BACKBONE
DESIGN CRITERIA

Date Published: February 2002

Prepared for the
U.S. Department of Energy
Office of Science

UT-Battelle LLC managing the
Spallation Neutron Source Activities at the

Argonne National Laboratory	Brookhaven National Laboratory
Lawrence Berkeley National Laboratory	Los Alamos National Laboratory
Oak Ridge National Laboratory	Thomas Jefferson National Accelerator Facility

under contract DE-AC05-96OR22464
for the
U.S. DEPARTMENT OF ENERGY

SNS 108050000-DC0002-R00

SPALLATION NEUTRON SOURCE
SITE COMMUNICATIONS BACKBONE
DESIGN CRITERIA

February 2002

SNS Task Leader _____

J. E. Cleaves

SvT Task Leader _____

T. Tenison

1.0 Scope

This document provides requirements and criteria for Title II design documents needed to install and terminate the Site Communications Backbone cabling. The Site Communications Backbone consists of fiber and copper cabling that carries controls and communications (not power) signals that in nearly all cases, are external to buildings and use cabling which is installed in duct bank and/or conduit provided by the Site Utilities contractor.

The scope of this work will be to install cabling and terminate it on patch panels in communication and/or control rooms as shown in Sketch O below. The I&C contractor will procure patch panels, cabling, and all other hardware necessary to complete the work.

It is intended that the installation and termination of this cabling will be performed by the I&C Installation contractor. Thus, the Statement of Work (SOW) for the CF controls I&C installation, unit price contract will include installation of fiber optic and copper cabling in the duct bank provided by site communications contractor. An additional Task Order design package to be issued to the unit price contractor will be provided by this design criteria.

Generating this task order package will include:

a) Completing drawing “Site Communications Backbone” which has been started by SNS. This drawing shows all cable runs and end points and will serve as the package “P&ID”.
b) Change existing duct cross section details as needed.
c) Generating and overall specification 170xx for the package and other specifications needed to support installation and termination and testing of the cabling.
d) Generating routing drawings as needed to show routing of cabling inside the buildings to communication and/or control rooms.
e) Generating patch panel installation and cable termination detail drawings

2.0 Requirements

a) Use Knight specifications (16000 series) and drawings showing building and site layouts as appropriate. Drawing and SNS specification numbers shall be assigned per SNS 109000000-DC0001-R00.

b) The site communications duct bank is shown on Knight CFC drawings for the site & utilities construction package and DCN T1-SU1-01. The design of this duct bank should not be changed.

c) Cabling to be installed and terminated is listed in Table 1, Cable Number/Label and Route Listing. The contractor will be required to generate appropriate pull lists. This cabling is also shown on sketch SNS 108050000-TD0001 R00 Site Communications Backbone. Note: The sketch shows a 36 fiber line for temporary connection to ORNL. This line is to be installed by others (Qwest), not the I&C Installation Contractor.

d) Dedicated ducts or conduit shall be provided for GC/MPS (Type A and B cables), PPS (Type C cables) and NFSS (Type H cables), TPS channel 1 (Type F cables), TPS channel 2 (Type F cables), FPS (Type L cables), and CF controls and Telephone (Type M and P cables). Each fiber cable shall be installed in a dedicated inner duct.

e) Do not remove any Fire Protection System (FPS) conduits where they are needed for the cables listed in Table 2 below. These conduits will be used for copper cabling installed by the fire alarm design-build contractor.

Table 2, FPS Copper Runs in Ductbank (By Fire Alarm Design Build Contractor)

		Empty FPS Ductbank Provided**				
CableNo	Symbol on Drawing*	FromLoc	ToLoc	Cable Type	FACP	Service
8800L12	L12	TVA Switchgear	CUB comm rm	see 16730	CUB	TVA Switchgear House F/A Devices
8800L13	L13	Central Exhaust Facility	RING SB comm rm	see 16730	Ring SB	Central Exhaust Facility F/A Devices
8800L14	L14	Water Tower	RING SB comm rm	see 16730	Ring SB	Water Tower F/A Devices
8800L15	L15	Ring INJ DUMP SB	RING SB comm rm	see 16730	Ring SB	Ring INJ DUMP SB F/A Devices
8800L16	L16	Ring West Makeup Air	RING SB comm rm	see 16730	Ring SB	Ring West Makeup Air Bldg F/A
8800L17	L17	Ring East Makeup Air	RING SB East Wall	see 16730	Ring SB	Ring East Makeup Air Bldg F/A
8800L18	L18	Compressor Bldg	TA-218 in Tgt Bldg	see 16730	Target	Compressor Bldg F/A Devices

f) Type A and B cables (Global Controls and Machine Protection System) terminate in patch panels installed in cabinets installed by others (the building General Contractor).

g) Except where otherwise stated in Table 1, Type C, F, H, L, and P cables will be terminated in lockable, dedicated patch panels that are provided by the I&C Installation contractor. Where terminations in cabinets are indicated, cabinets, patch panels, or other termination equipment are provided by others.

h) Termination of Type M (copper CF Controls) Cat 5e cables will be terminated in patch panels installed in Global Controls cabinets installed by others (the building General Contractor) and on Unit Substation control panels. Other Type M cables will be terminated in CF controls cabinets and skid mounted control panels, CF controls sensors, and/or control elements.

i) All inner ducts shall be installed before any cabling (copper or fiber) is pulled.

j) Specific cable pulls shall be determined by the contractor such that:

   1) Cabling that is completely internal to buildings shall be installed and terminated prior to the building Ready for Equipment (RFE) status.

   2) Cabling with portions external to buildings shall be installed and terminated prior to RFE status of the later of the cabling source or destination.

k) Install Power Monitoring Blue Hose cables in accordance with sketches PM1 through PM5.

Table 1, Cable Number/Label & Route Listing

CableNo	Drawing Symbol	From Loc	To Loc	Cable Type	Service
8800A01	A01	FE comm rm FE-105	HEBT SB comm rm HS-104	48mm/48sm	Global Controls CF Controls - Cnet
8800A02	A02	FE comm rm FE-105	CHL/RF comm rm CY-125	48mm/48sm	Global Controls CF Controls - Cnet
8800A03	A03	FE comm rm FE-105	RING SB comm rm RN-307	48mm/48sm	Global Controls CF Controls - Cnet
8800A04	A04	FE comm rm FE-105	RING SB comm rm RN-307	48mm/48sm	Global Controls
8800A05	A05	FE comm rm FE-105	RTBT SB comm rm RS-302	48mm/48sm	Global Controls CF Controls - Cnet
8800A06	A06	FE comm rm FE-105	Tgt Bldg comm rm TA103	48mm/48sm	Global Controls CF Controls - Cnet
8800A07	A07	FE comm rm FE-105	Tgt Bldg comm rm TA-B110	48mm/48sm	Global Controls
8800A08	A08	FE comm rm FE-105	CUB comm rm CU 102	48mm/48sm	Global Controls CF Controls - Cnet
8800A09	A09	FE comm rm FE-105	CER in CLO	48mm/48sm	Global Controls CF Controls - Cnet
8800A10	A10	FE comm rm FE-105	CER in CLO	48mm/48sm	Global Controls
8800A11	A11	FE comm rm FE-105	Kly comm rm 1	48mm/48sm	Global Controls
8800A12	A12	FE comm rm FE-105	Kly comm rm 2	48mm/48sm	Global Controls
8800A13	A13	FE comm rm FE-105	Kly comm rm 3	48mm/48sm	Global Controls
8800A14	A14	FE comm rm FE-105	Kly comm rm 4	48mm/48sm	Global Controls
8800A15	A15	FE comm rm FE-105	Kly comm rm 5	48mm/48sm	Global Controls
8800A16	A16	FE comm rm FE-105	Kly comm rm 6	48mm/48sm	Global Controls
8800A17	A17	CHL/RF comm rm CY-125	CHL Control Room	48mm/48sm	Global Controls
8800B01	B01	FE comm rm FE-105	HEBT SB comm rm HS-104	12mm/12sm	MPS
8800B02	B02	FE comm rm FE-105	HEBT SB comm rm HS-104	12mm/12sm	MPS
8800B03	B03	Kly comm rm 6	HEBT SB comm rm HS-104	12mm/12sm	MPS
8800B04	B04	Kly comm rm 6	HEBT SB comm rm HS-104	12mm/12sm	MPS
8800B05	B05	HEBT SB comm rm HS-104	RING SB comm rm RN-307	12mm/12sm	MPS
8800B06	B06	HEBT SB comm rm HS-104	RING SB comm rm RN-307	12mm/12sm	MPS
8800B07	B07	FE comm rm FE-105	RING SB comm rm RN-307	12mm/12sm	MPS
8800B08	B08	FE comm rm FE-105	RING SB comm rm RN-307	12mm/12sm	MPS
8800B09	B09	RING SB comm rm RN-307	INJ DUMP	6-2/C-SH#18	MPS
8800B10	B10	RING SB comm rm RN-307	CER in CLO	12mm/12sm	MPS
8800B11	B11	RING SB comm rm RN-307	CER in CLO	12mm/12sm	MPS
8800B12	B12	RING SB comm rm RN-307	Tgt Bldg comm rm TA-B110	12mm/12sm	MPS
8800B13	B13	RING SB comm rm RN-307	Tgt Bldg comm rm TA-B110	12mm/12sm	MPS
8800B14	B14	RING SB comm rm RN-307	RTBT SB comm rm RS-302	12mm/12sm	MPS
8800B15	B15	RING SB comm rm RN-307	RTBT SB comm rm RS-302	12mm/12sm	MPS
8800B16	B16	RTBT SB comm rm RS-302	Tgt Bldg comm rm TA-B110	12mm/12sm	MPS
8800B17	B17	RTBT SB comm rm RS-302	Tgt Bldg comm rm TA-B110	12mm/12sm	MPS
8800B18	B18	FE comm rm FE-105	RTBT SB comm rm RS-302	12mm/12sm	MPS
8800B19	B19	FE comm rm FE-105	RTBT SB comm rm RS-302	12mm/12sm	MPS
8800B20	B20	FE comm rm FE-105	CER in CLO	12mm/12sm	MPS
8800B21	B21	FE comm rm FE-105	CER in CLO	12mm/12sm	MPS
8800B22	B22	FE comm rm FE-105	Kly comm rm 1	12mm/12sm	MPS
8800B23	B23	FE comm rm FE-105	Kly comm rm 1	12mm/12sm	MPS
8800B24	B24	Kly comm rm 1	Kly comm rm 2	12mm/12sm	MPS
8800B25	B25	Kly comm rm 1	Kly comm rm 2	12mm/12sm	MPS
8800B26	B26	Kly comm rm 2	Kly comm rm 3	12mm/12sm	MPS
8800B27	B27	Kly comm rm 2	Kly comm rm 3	12mm/12sm	MPS
8800B28	B28	Kly comm rm 3	Kly comm rm 4	12mm/12sm	MPS
8800B29	B29	Kly comm rm 3	Kly comm rm 4	12mm/12sm	MPS

Table 1, Cable Number/Label & Route Listing

CableNo	Drawing Symbol	From Loc	To Loc	Cable Type	Service
8800B30	B30	Kly comm rm 4	Kly comm rm 5	12mm/12sm	MPS
8800B31	B31	Kly comm rm 4	Kly comm rm 5	12mm/12sm	MPS
8800B32	B32	Kly comm rm 5	Kly comm rm 6	12mm/12sm	MPS
8800B33	B33	Kly comm rm 5	Kly comm rm 6	12mm/12sm	MPS
8800C01	C01	RING SB comm rm RN-307	PPS cab in INJ DUMP Bldg	RG6 Coax	PPS - Cnet
8800C02	C02	RING SB comm rm RN-307	PPS cab in INJ DUMP Bldg	RG6 Coax	PPS - Cnet
8800C03	C03	PPS cab at FE B.8, 1.7	HEBT SB comm rm HS-104	06mm/06sm	PPS
8800C04	C04	PPS cab at FE B.8, 1.7	HEBT SB comm rm HS-104	06mm/06sm	PPS
8800C05	C05	CER in CLO	RTBT SB comm rm RS-302	06mm/06sm	PPS
8800C06	C06	CER in CLO	RTBT SB comm rm RS-302	06mm/06sm	PPS
8800C07	C07	CER in CLO	RING SB comm rm RN-307	06mm/06sm	PPS
8800C08	C08	CER in CLO	RING SB comm rm RN-307	06mm/06sm	PPS
8800C09	C09	CER in CLO	Tgt bldg control rm TA-B112	06mm/06sm	PPS
8800C10	C10	CER in CLO	Tgt bldg control rm TA-B112	06mm/06sm	PPS
8800C11	C11	FE comm rm FE-105	CER in CLO	06mm/06sm	PPS
8800C12	C12	FE comm rm FE-105	CER in CLO	06mm/06sm	PPS
8800C13	C13	RING SB comm rm RN-307	PPS cab in INJ DUMP Bldg	06mm/06sm	PPS
8800C14	C14	RING SB comm rm RN-307	PPS cab in INJ DUMP Bldg	06mm/06sm	PPS
8800C15	C15	FE comm rm FE-105	Tgt bldg control rm TA-B112	06mm/06sm	PPS
8800C16	C16	FE comm rm FE-105	Tgt Bldg comm rm TA-B110	06mm/06sm	PPS
8800C17	C17	FE comm rm FE-105	RTBT SB comm rm RS-302	06mm/06sm	PPS
8800C18	C18	FE comm rm FE-105	RTBT SB comm rm RS-302	06mm/06sm	PPS
8800C19	C19	FE comm rm FE-105	RING SB comm rm RN-307	06mm/06sm	PPS
8800C20	C20	FE comm rm FE-105	RING SB comm rm RN-307	06mm/06sm	PPS
8800C21	C21	CER in CLO	HEBT SB comm rm HS-104	06mm/06sm	PPS
8800C22	C22	CER in CLO	HEBT SB comm rm HS-104	06mm/06sm	PPS
8800C23	C23	HEBT SB comm rm HS-104	Central Exhaust Facility	06mm/06sm	PPS
8800C24	C24	HEBT SB comm rm HS-104	Central Exhaust Facility	06mm/06sm	PPS
8800F01	F01	Tgt Bldg Cnt Rm TA-B110	Target Control Rm in CLO	12 pr # 12	TPS - Channel 1
8800F02	F02	Tgt Bldg Cnt Rm TA-B110	Target Control Rm in CLO	12 pr # 12	TPS - Channel 2
8800F03	F03	Tgt Bldg Cnt Rm TA-B110	TPS cab at RTBT SB B.4, 20	12 pr # 12	TPS - Channel 1
8800F04	F04	Tgt Bldg Cnt Rm TA-B110	TPS cab at RTBT SB B.4, 20	12 pr # 12	TPS - Channel 2
8800F05	F05	Tgt Bldg Cnt Rm TA-B110	TPS cabinet at FE B.8, 1.7	12 pr # 12	TPS - Channel 1
8800F06	F06	Tgt Bldg Cnt Rm TA-B110	TPS cabinet at FE B,3	12 pr # 12	TPS - Channel 2
8800F07	F07	Tgt Bldg Cnt Rm TA-B110	Target Control Rm in CLO	12 pr # 12	TPS - Channel 1
8800F08	F08	Tgt Bldg Cnt Rm TA-B110	Target Control Rm in CLO	12 pr # 12	TPS - Channel 2
8800H01	H01	Tgt Bldg Cnt Rm TA-B110	Target Control Rm in CLO	06mm/06sm	NFSS - Cnet
8800H02	H02	Tgt Bldg Cnt Rm TA-B110	Target Control Rm in CLO	06mm/06sm	NFSS - Cnet
8800L01	L01	FE comm rm FE-105	CHL/RF comm rm CY-125	6mm,6sm	FPS
8800L02	L02	FE comm rm FE-105	CUB riser rm	6mm,6sm	FPS
8800L03	L03	CHL/RF comm rm CY-125	Kly comm rm 6	6mm,6sm	FPS
8800L04	L04	Kly comm rm 6	HEBT SB comm rm HS-104	6mm,6sm	FPS
8800L05	L05	HEBT SB comm rm HS-104	RING SB comm rm RN-307	6mm,6sm	FPS
8800L06	L06	RING SB comm	RTBT SB comm rm RS-302	6mm,6sm	FPS
8800L07	L07	RTBT SB comm rm RS-302	Tgt Bldg comm rm TA103	6mm,6sm	FPS
8800L08	L08	Tgt Bldg TA-103	CER in CLO	6mm,6sm	FPS
8800L09	L09	CER in CLO	CUB riser rm	6mm,6sm	FPS
8800L10	L10	CER in CLO	CLO – Qwest Demark	6mm,6sm	FPS
8800L11	L11	CLO -- MTR Qwest	CLO--CER	6mm,6sm	FPS
8800M01	M01	CUB comm rm CU 102	CF_CU:ENCL02 at cooling tower	RG6 Coax	CF Controls - Cnet
8800M02	M02	Primary Substation control area "Fred's place"	CUB comm rm CU 102	cat5e	CF Controls

Table 1, Cable Number/Label & Route Listing

CableNo	Drawing Symbol	From Loc	To Loc	Cable Type	Service
8800M03	M03	Primary Substation control area "Fred's place"	CUB comm rm CU 102	cat5e	Global Controls - Office Network
8800M04	M04	CF_HS:ENCL01 in HEBT SB	Tank Area, rm HE-105	2 twpr #18SH	CF Controls - ~~Cnet~~
8800M05	M05	CF_RN:ENCL01 in Ring SB	~~CF_ID:ENCL01 in Injection Dump bldg~~ CF_RG:ENCL01 in West MUA Bldg 8413	RG6 Coax	CF Controls - Cnet
8800M06	M06	FE comm rm FE-105	Grinder Pump Sta	5 pr #16	CF Controls
8800M07	M07	~~CF_RS:ENCL01 in RTBT SB~~ CF_RG:ENCL02 in East MUA Bldg 8423	H2O Booster Sta	RG6 Coax	CF Controls - Cnet
8800M08	M08	~~CF_RS:ENCL01 in RTBT SB~~ FE Comm Room FE-105	CF_ST:ENCL01 in Central Exhaust Building	6mm,6sm	CF Controls - Cnet
8800M09	M09	FE Unit Substation SS1	KL Unit Substation SS1	Blue Hose	Power Monitoring
8800M10	M10	CH Unit Substation SS4	KL #6 Comm Room	Blue Hose	Power Monitoring
8800M11	M11	KL Unit Substation SS1	KL Unit Substation SS2	Blue Hose	Power Monitoring
8800M12	M12	KL Unit Substation SS2	KL Unit Substation SS3	Blue Hose	Power Monitoring
8800M13	M13	KL Unit Substation SS3	KL Unit Substation SS4	Blue Hose	Power Monitoring
8800M14	M14	KL Unit Substation SS4	KL #6 Comm Room	Blue Hose	Power Monitoring
8800M15	M15	HE Unit Substation SS1	KL #6 Comm Room	Blue Hose	Power Monitoring
8800M16	M16	RT Unit Substation SS1	TA Unit Substation SS4	Blue Hose	Power Monitoring
8800M17	M17	RN Unit Substation SS3	RN Unit Substation SS2	Blue Hose	Power Monitoring
8800M18	M18	RN Unit Substation SS2	RN Unit Substation SS1	Blue Hose	Power Monitoring
8800M19	M19	RN Unit Substation SS1	RN Unit Substation SS4	Blue Hose	Power Monitoring
8800M20	M20	RN Unit Substation SS4	RSB Comm Room	Blue Hose	Power Monitoring
8800M21	M21	CH Unit Substation SS2	CH Unit Substation SS1	Blue Hose	Power Monitoring
8800M22	M22	CH Unit Substation SS1	CH Unit Substation SS4	Blue Hose	Power Monitoring
8800M23	M23	CH Unit Substation SS3	KL #6 Comm Room	Blue Hose	Power Monitoring
8800M24	M24	TA Unit Substation SS1	Target Comm Room	Blue Hose	Power Monitoring
8800M25	M25	TA Unit Substation SS3	Target Comm Room	Blue Hose	Power Monitoring
8800M26	M26	TA Unit Substation SS4	TA Unit Substation SS1	Blue Hose	Power Monitoring
8800M27	M27	CF_ID:ENCL01 in Injection Dump bldg	CF_RG:ENCL01 in MUA Bldg	RG6 Coax	CF Controls - Cnet
8800M28	M28	CF_RN:ENCL01 in Ring SB	CF_RG:ENCL02 in MUA Bldg	RG6 Coax	CF Controls - Cnet
8800M29	M29	CF_CU:ENCL01 in CUB	Site Sanitary Sewer Pump Station Panel in Grid H5	3 twpr #18SH & 8 pr#16	CF Controls
8800M30	M30	Ring West Makeup Air Bldg	Pressure Xmitter @ Base of Water Tank	3 twpr #18SH	CF Controls
8800M31	M31	CF_RN:ENCL01 in Ring SB	CF_RG:ENCL01 in West MUA Bldg 8413	Dnet Thick	CF Controls - Dnet
8800M32	M32	CF_RG:ENCL01 in West MUA Bldg 8413	CF_ID:ENCL01 in Ring Injection Dump Bldg	Dnet Thick	CF Controls - Dnet
8800M33	M33	RN-1MCC1 in Ring SB	CF_RG:ENCL02 in East MUA Bldg 8423	Dnet Thick	CF Controls - Dnet
8800M34	M34	CU Unit Substation SS4	CU Unit Substation SS1	Blue Hose	Power Monitoring
8800M35	M35	CU Unit Substation SS1	CU Unit Substation SS2	Blue Hose	Power Monitoring
8800M36	M36	CU Unit Substation SS2	CU Unit Substation SS3	Blue Hose	Power Monitoring
8800M37	M37	CU Unit Substation SS3	CUB Comm Room	Blue Hose	Power Monitoring
8800M38	M38	TVA Main Substation	CU Unit Substation SS3	Blue Hose	Power Monitoring
8800M39	M39	CL Unit Substation SS3	CL Unit Substation SS2	Blue Hose	Power Monitoring
8800M40	M40	CL Unit Substation SS2	CL Unit Substation SS1	Blue Hose	Power Monitoring
8800M41	M41	CL Unit Substation SS1	CLO Main Equip Room	Blue Hose	Power Monitoring
8800P01	P01	Kly comm rm 6	HEBT SB comm rm HS-104	Cu,25pr	Telephone
8800P02	P02	RING SB comm rm RN-307	INJ DUMP	Cu,25pr	Telephone

Table 1, Cable Number/Label & Route Listing

CableNo	Drawing Symbol	From Loc	To Loc	Cable Type	Service
8800P03	P03	RING SB comm rm RN-307	Central Exhaust Facility	Cu,25pr	Telephone
8800P04	P04	RING SB comm rm RN-307	RTBT SB comm rm RS-302	Cu,25pr	Telephone
8800P05	P05	RING SB comm rm RN-307	H2O Booster Sta	Cu,25pr	Telephone
8800P06	P06	CUB comm rm CU 102	Primary Substation	Cu,25pr	Telephone
8800P07	P07	Tgt Bldg comm rm TA103	HE-comprsr Bldg	Cu,25pr	Telephone
8800P08	P08	FE comm rm FE-105	CHL/RF comm rm CY-125	6mm/6sm	Telephone
8800P09	P09	FE comm rm FE-105	CUB comm rm CU 102	6mm/6sm	Telephone
8800P10	P10	FE comm rm FE-105	Tgt Bldg comm rm TA103	6mm/6sm	Telephone
8800P11	P11	FE comm rm FE-105	RING SB comm rm RN-307	6mm/6sm	Telephone
8800P12	P12	FE comm rm FE-105	Kly comm rm 1	Cu, 400 pr	Telephone
8800P13	P13	Kly comm rm 1	Kly comm rm 2	Cu, 400 pr	Telephone
8800P14	P14	Kly comm rm 2	Kly comm rm 3	Cu, 300 pr	Telephone
8800P15	P15	Kly comm rm 3	Kly comm rm 4	Cu, 300 pr	Telephone
8800P16	P16	Kly comm rm 4	Kly comm rm 5	Cu, 200 pr	Telephone
8800P17	P17	Kly comm rm 5	Kly comm rm 6	Cu, 200 pr	Telephone
8800P18	P18	CLO – CER	CUB comm. rm	12mm/12sm	Telephone
8800P19	P19	CLO – CER	FE comm rm FE-105	12mm/12sm	Telephone
8800P20	P20	CLO – CER	RTBT comm. rm	12mm/12sm	Telephone
8800P21	P21	CLO – CER	RING SB comm. rm	12mm/12sm	Telephone
8800P22	P22	CLO – CER	Tgt Bldg comm rm TA-B110	12mm/12sm	Telephone
8800P23	P23	CLO – Qwest Demark	CLO – CER	72mm/72sm	Telephone
8800P24	P24	Kly comm rm 6	CHL/RF comm rm CY-125	Cu,50pr	Telephone

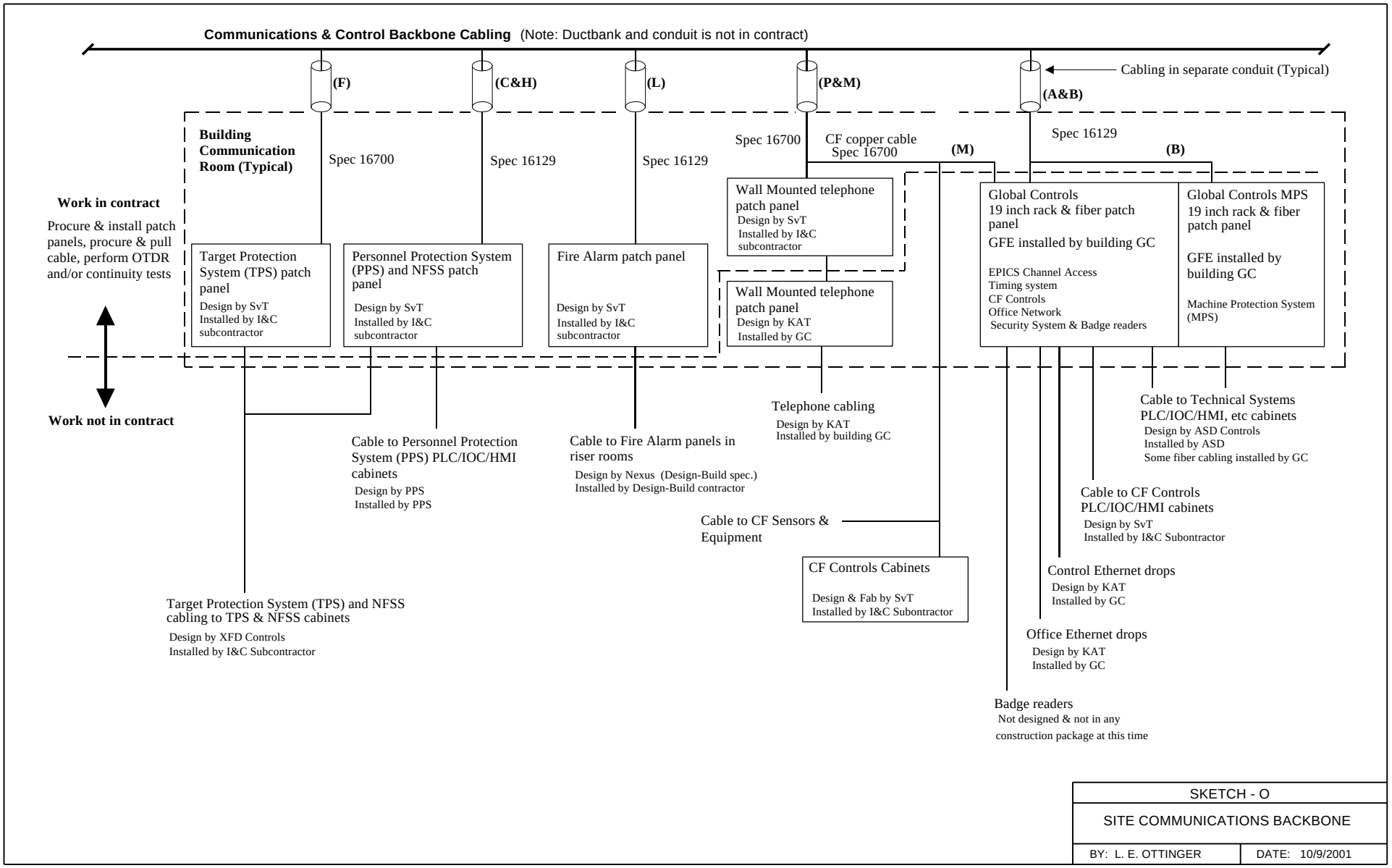
Communications & Control Backbone Cabling (Note: Ductbank and conduit is not in contract)
(F)
(C&H)
(L)
(P&M)
(A&B)
Cabling in separate conduit (Typical)
Building Communication Room (Typical)
Spec 16700
Spec 16129
Spec 16129
Spec 16700
CF copper cable Spec 16700
(M)
Spec 16129
(B)
Work in contract
Procure & install patch panels, procure & pull cable, perform OTDR and/or continuity tests
Target Protection System (TPS) patch panel
Design by SvT
Installed by I&C subcontractor
Personnel Protection System (PPS) and NFSS patch panel
Design by SvT
Installed by I&C subcontractor
Fire Alarm patch panel
Design by SvT
Installed by I&C subcontractor
Wall Mounted telephone patch panel
Design by SvT
Installed by I&C subcontractor
Wall Mounted telephone patch panel
Design by KAT
Installed by GC
Global Controls 19 inch rack & fiber patch panel
GFE installed by building GC
EPICS Channel Access
Timing system
CF Controls
Office Network
Security System & Badge readers
Global Controls MPS 19 inch rack & fiber patch panel
GFE installed by building GC
Machine Protection System (MPS)
Work not in contract
Telephone cabling
Design by KAT
Installed by building GC
Cable to Technical Systems PLC/IOC/HMI, etc cabinets
Design by ASD Controls
Installed by ASD
Some fiber cabling installed by GC
Cable to Personnel Protection System (PPS) PLC/IOC/HMI cabinets
Design by PPS
Installed by PPS
Cable to Fire Alarm panels in riser rooms
Design by Nexus (Design-Build spec.)
Installed by Design-Build contractor
Cable to CF Controls PLC/IOC/HMI cabinets
Design by SvT
Installed by I&C Subontractor
Cable to CF Sensors & Equipment
CF Controls Cabinets
Design & Fab by SvT
Installed by I&C Subontractor
Control Ethernet drops
Design by KAT
Installed by GC
Target Protection System (TPS) and NFSS cabling to TPS & NFSS cabinets
Design by XFD Controls
Installed by I&C Subcontractor
Office Ethernet drops
Design by KAT
Installed by GC
Badge readers
Not designed & not in any construction package at this time
SKETCH - O
SITE COMMUNICATIONS BACKBONE
BY: L. E. OTTINGER
DATE: 10/9/2001

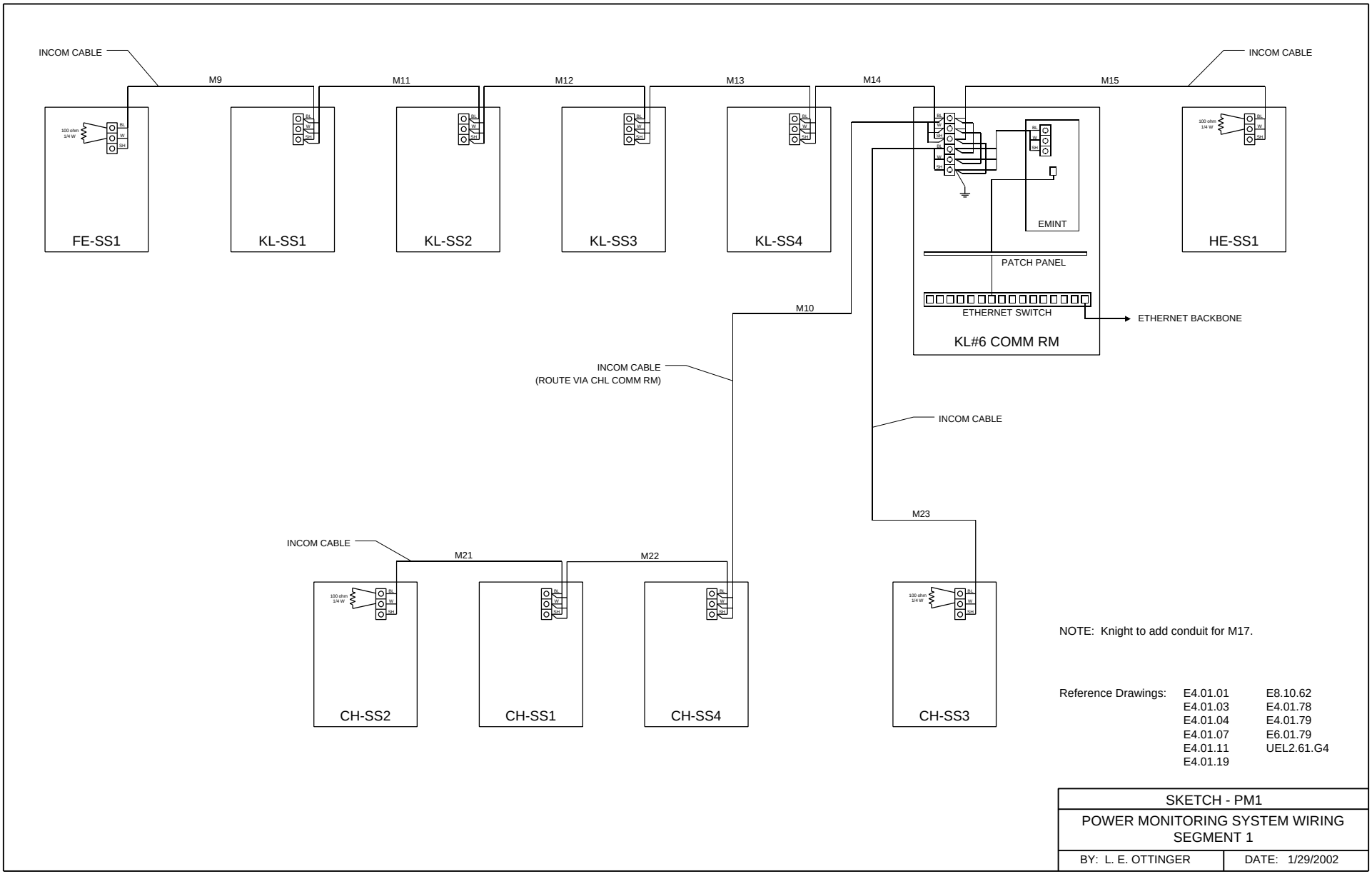

NOTE: Knight to add conduit for M17.

Reference Drawings:

E4.01.01	E8.10.62
E4.01.03	E4.01.78
E4.01.04	E4.01.79
E4.01.07	E6.01.79
E4.01.11	UEL2.61.G4
E4.01.19	

SKETCH - PM1

POWER MONITORING SYSTEM WIRING SEGMENT 1

BY: L. E. OTTINGER | DATE: 1/29/2002

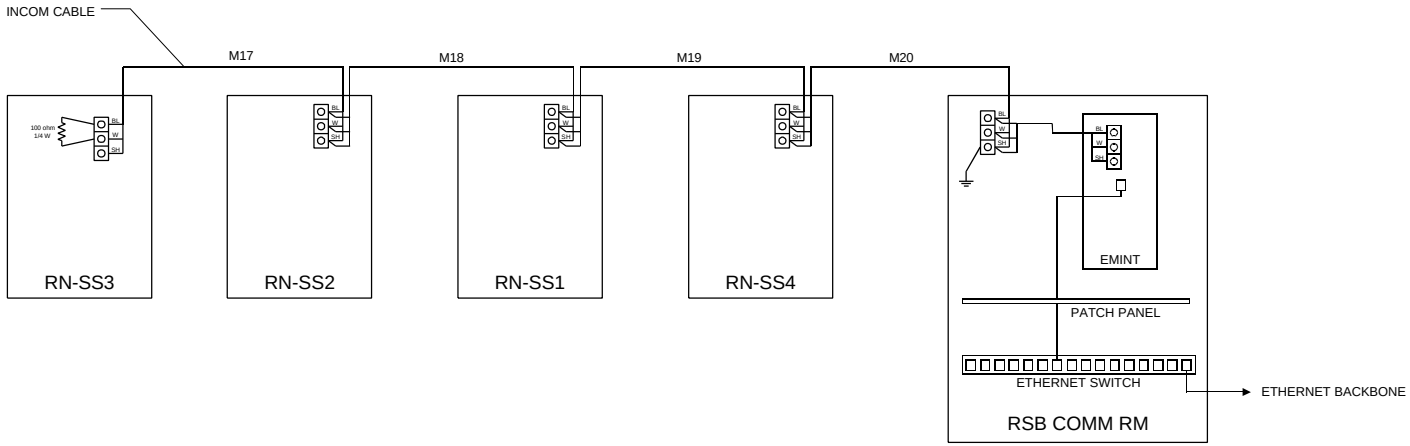

NOTE: Knight to add conduits for M19 - M22.

Reference Drawings: E4.03.31

SKETCH - PM2	
POWER MONITORING SYSTEM WIRING SEGMENT 2	
BY: L. E. OTTINGER	DATE: 1/29/2002

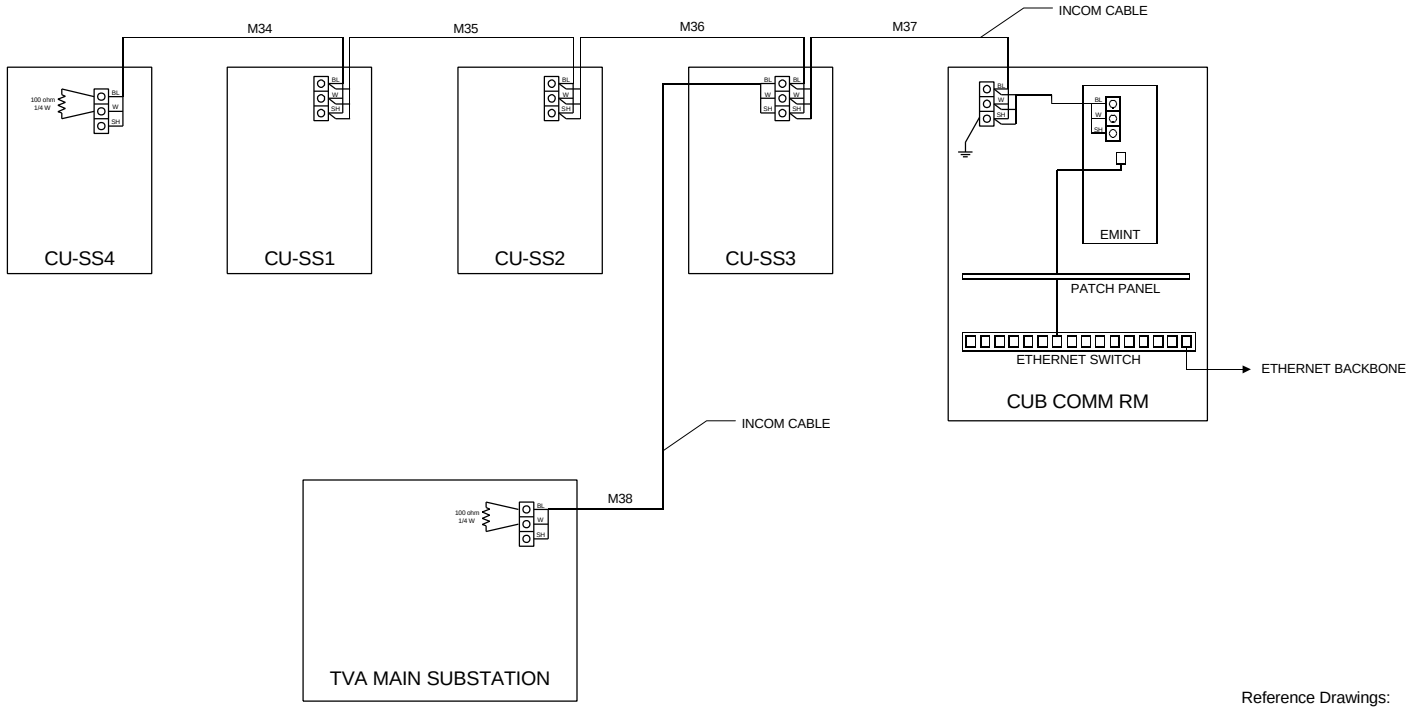

Reference Drawings: E4.01.75
UEL2.61.G4

SKETCH - PM3	
POWER MONITORING SYSTEM WIRING SEGMENT 3	
BY: L. E. OTTINGER	DATE: 1/29/2002

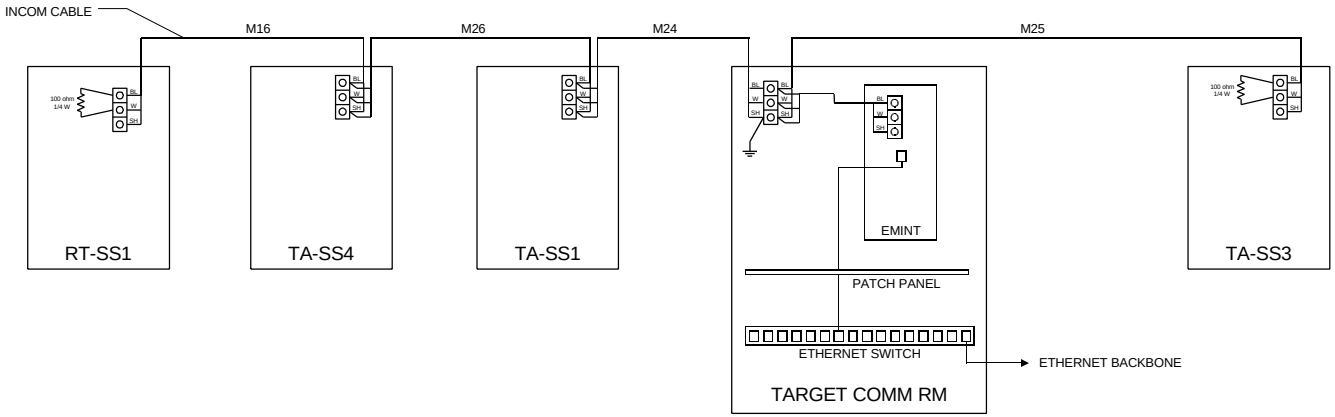

NOTE: Knight to add conduit for M28.

Reference Drawings: E4.03.36
E4.02.51
E4.02.41
E4.01.49

SKETCH - PM4	
POWER MONITORING SYSTEM WIRING SEGMENT 4	
BY: L. E. OTTINGER	DATE: 1/29/2002

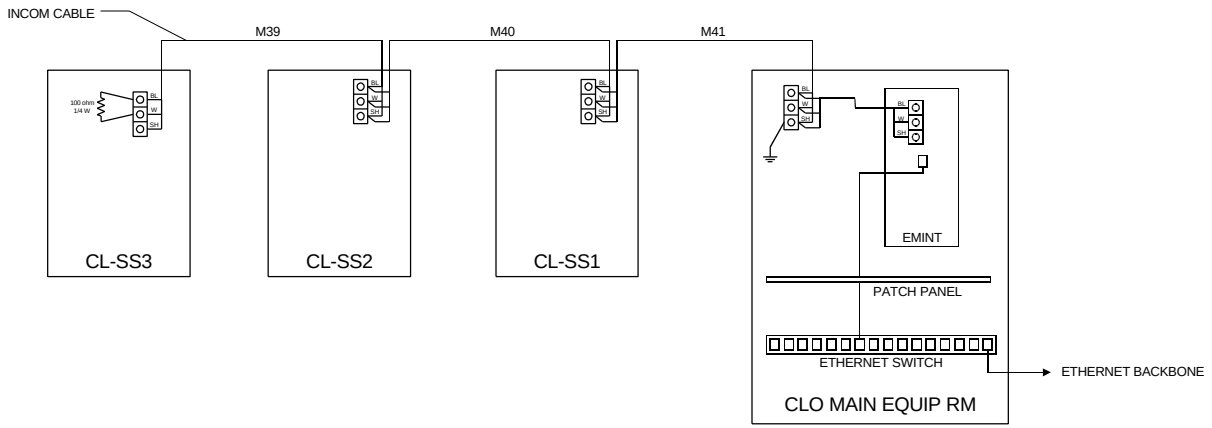

Reference Drawings: E4.01.64
E4.B2.62

SKETCH - PM5	
POWER MONITORING SYSTEM WIRING SEGMENT 5	
BY: L. E. OTTINGER	DATE: 1/29/2002