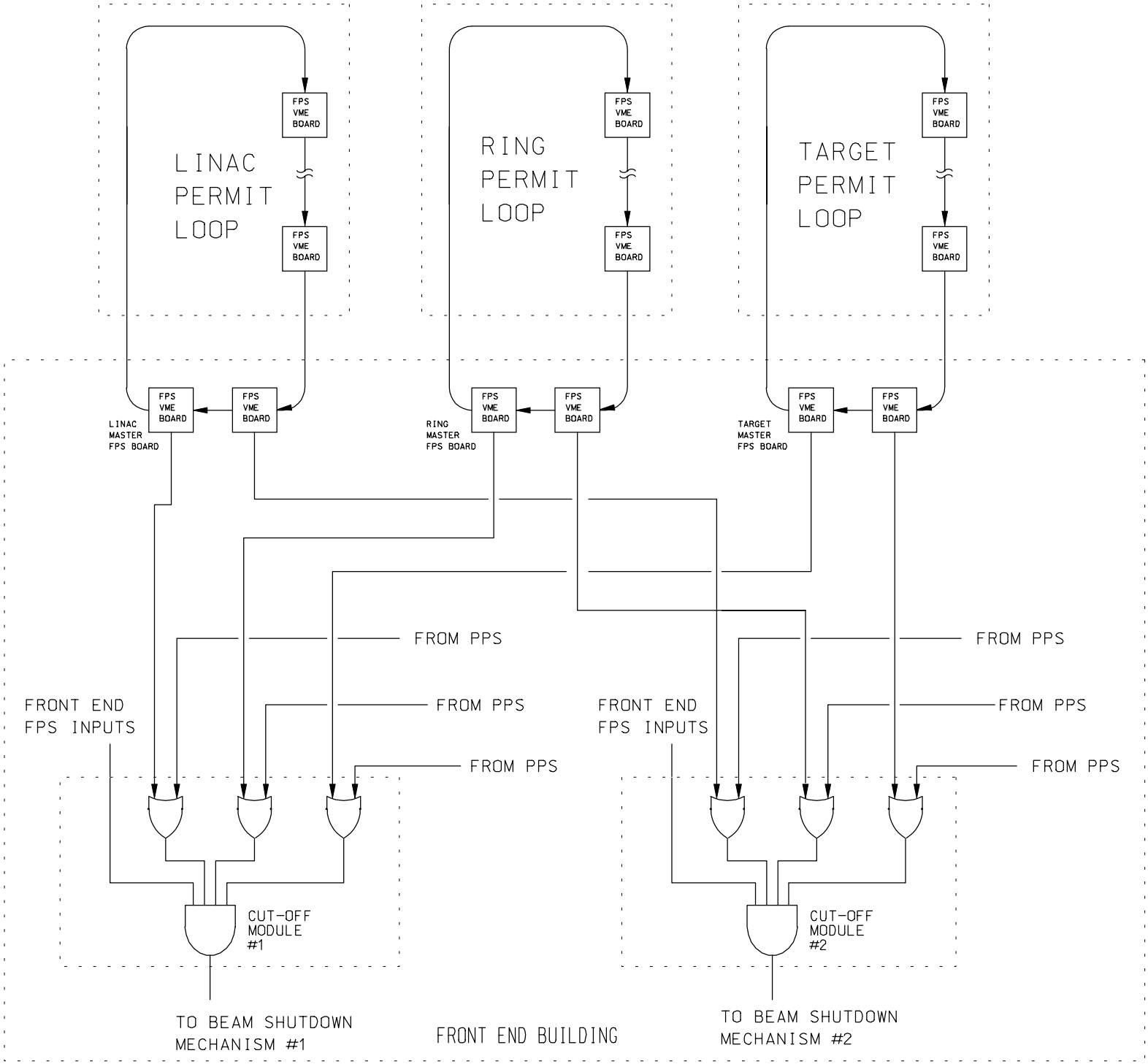
LINAC PERMIT LOOP
RING PERMIT LOOP
TARGET PERMIT LOOP
FPS VME BOARD
LINAC MASTER FPS BOARD
RING MASTER FPS BOARD
TARGET MASTER FPS BOARD
FROM PPS
FRONT END FPS INPUTS
CUT-OFF MODULE #1
CUT-OFF MODULE #2
TO BEAM SHUTDOWN MECHANISM #1
TO BEAM SHUTDOWN MECHANISM #2
FRONT END BUILDING