NEXT ASS'Y: | FINAL ASS'Y:

## NOTES

1. INTERPRET DRAWING PER MECHANICAL ENGINEERING DRAFTING STANDARD ES-3.1-2.
2. INTERPRET DIMENSIONS AND TOLERANCES PER ANSI Y14.5M.
3. DIMENSIONS ARE IN .

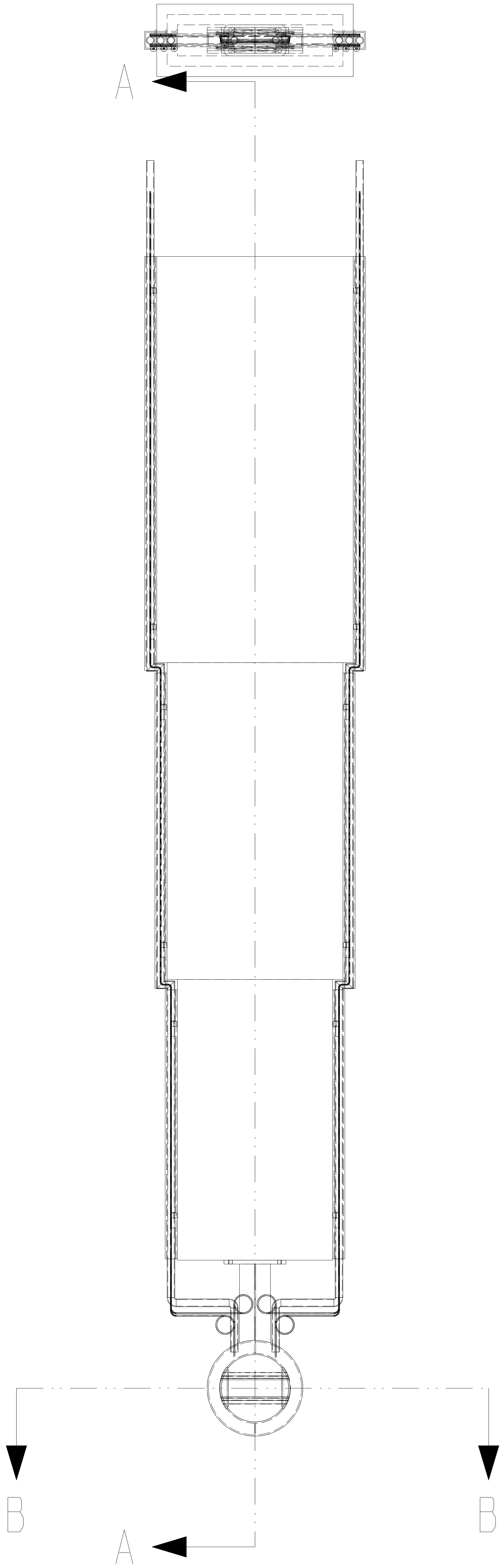


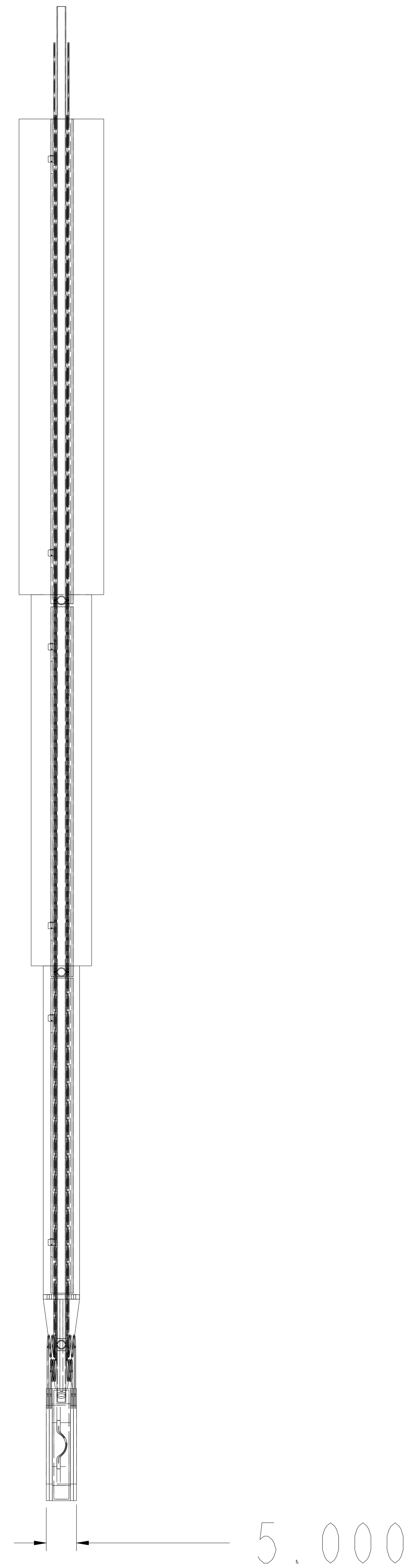


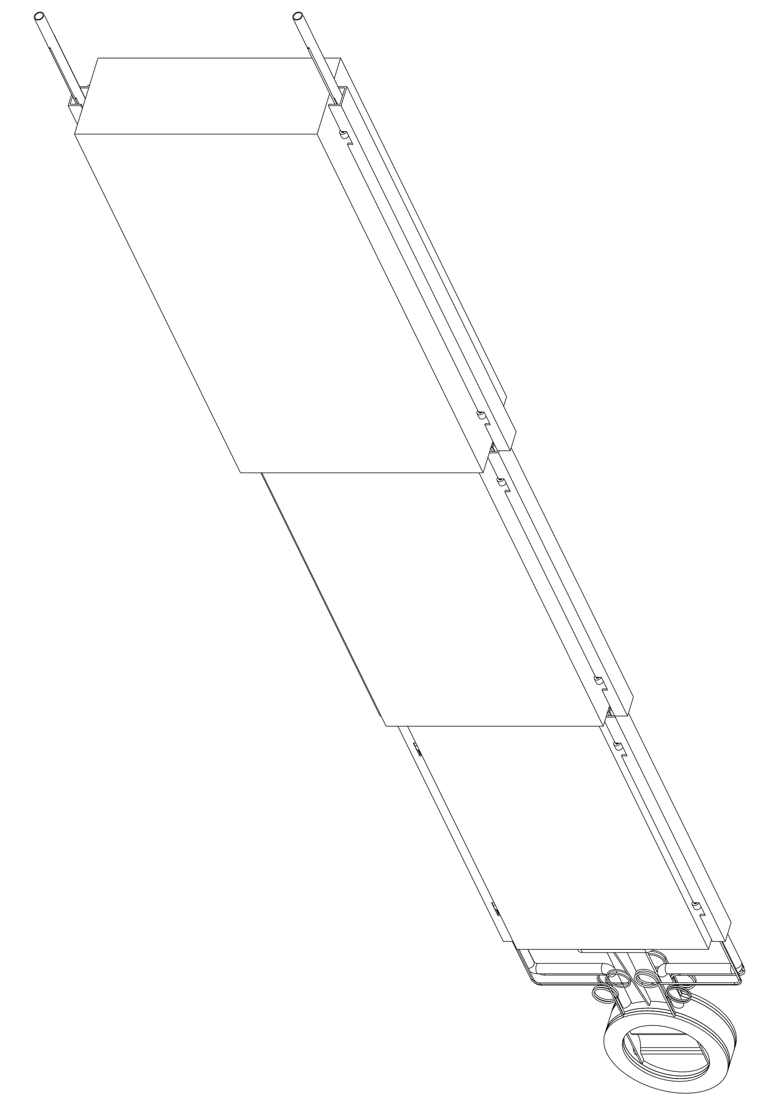

ISOMETRIC VIEW

# PRELIMINARY

| next assy | -1 | CAGE CODE | PART OR IDENTIFYING NO | NOMENCLATURE OR DESCRIPTION | MATERIAL | SPECIFICATION | FIND NO |
|---|---|---|---|---|---|---|---|
| | 2 | | 642SEALLGRHVAC | -- | -- | -- | 20 |
| | 2 | | 642SEALCOILSHTLHPRESS | -- | -- | -- | 19 |
| | 2 | | 642SEALCOILRHVAC | -- | -- | -- | 18 |
| | 2 | | 642SEALCOILLHPRESS | -- | -- | -- | 17 |
| | 1 | | 642PWINTUBESHLDTOP | -- | -- | -- | 16 |
| | 1 | | 642PWINTUBESHLDMID | -- | -- | -- | 15 |
| | 1 | | 642PWINTUBESHLD | -- | -- | -- | 14 |
| | 4 | | 642PWINSMTUBETRANS | -- | -- | -- | 13 |
| | 2 | | 642PWINSMSTEP | -- | -- | -- | 12 |
| | 2 | | 642PWINSMSHTSTEP | -- | -- | -- | 11 |
| | 1 | | 642PWINSHLDTOPRGHT | -- | -- | -- | 10 |
| | 1 | | 642PWINSHLDRGHT | -- | -- | -- | 9 |
| | 1 | | 642PWINSHLDMIDRGHT | -- | -- | -- | 8 |
| | 4 | | 642PWINLGTUBETRANS | -- | -- | -- | 7 |
| | 2 | | 642PWINLGSTEP | -- | -- | -- | 6 |
| | 2 | | 642PWINLGRSTEP | -- | -- | -- | 5 |
| | 1 | | 642PWINDOWPLUG | -- | -- | -- | 4 |
| | 1 | | 642PWINDOWELDMENT | -- | | | 3 |
| | 2 | | 642PWINDOSEALASSY | -- | | | 2 |
| | 1 | | 642PWINDOASSY | -- | | | 1 |
| | | ← NEXT ASSEMBLY | | PARTS LIST | | | |

### QUALITY VERIFICATION

MECHANICAL AND STRUCTURAL
REFERENCE ORNL QV-001

| QV CLAUSE | DOCUMENTS REQUIRED | APPLICABLE TO PART NO * |
|---|---|---|
| 303 | MATERIAL MILL TEST REPORT | X |
| 325 | MATERIAL SELLER CERT | X |
| 326 | SPECIAL MATERIAL INSPECTION REPORT | X |
| 205 | MANUFACTURING, INSPECTION, AND TEST PLAN | X |
| 312 | FIELD INSPECTION AND TEST PLAN | X |
| 321 | WELD AND BRAZE INSPECTION REPORT | X |
| 322 | HEAT TREAT REPORT (W/CHART) | X |
| 310 | LEAK TEST REPORT | X |
| 315 | CLEANING CERT | X |
| 318 | DEVIATION REQUEST | X |
| 319 | NONCONFORMANCE REPORT | X |
| 323 | DIMENSIONAL REPORT | X |
| 330 | FUNCTIONAL TEST REPORT | X |
| : | : | : |
| : | : | : |
| : | : | : |
| : | : | : |
| : | : | : |
| 100 | DOCUMENTION | X |

* SYMBOL X INDICATES APPLICABLE TO ALL PARTS OR ITEMS

QA COORDINATOR | DATE

RPE

REV. XX DATE XX/XX/XX

M3E087000E201


NO REPRESENTATION OR WARRANTY, EXPRESSED OR IMPLIED, IS MADE AS TO THE ACCURACY, COMPLETENESS OR USEFULNESS OF THE INFORMATION OR STATEMENTS CONTAINED IN THESE DRAWINGS, OR THAT THE USE OR DISCLOSURE OF ANY INFORMATION, APPARATUS, METHOD OR PROCESS DISCLOSED IN THESE DRAWINGS MAY NOT INFRINGE PRIVATE RIGHTS OF OTHERS. NO LIABILITY IS ASSUMED WITH RESPECT TO THE USE OF, OR FOR DAMAGES RESULTING FROM THE USE OF, ANY INFORMATION, APPARATUS, METHOD OR PROCESS DISCLOSED IN THESE DRAWINGS. DRAWINGS MADE AVAILABLE FOR INFORMATION TO BIDDER ARE NOT TO BE USED FOR OTHER PURPOSES, AND ARE TO BE RETURNED UPON REQUEST OF THE FORWARDING CONTRACTOR.


P THIS DRAWING PRODUCED ON PRO-ENGINEER

THIS DOCUMENT CONTROLLED BY
CHANGE CONTROL SYSTEM___XXXX___
ENGINEERING PROCEDURE___XXXX___

| REV | CHANGE TYPE | CHANGE CONTROL SYSTEM | CHANGE REQUEST NUMBER | DESCRIPTION | A-E | BY | CHK | SECT | DEPT | DATE | PE | REQ | DATE | LM-ES | DATE | DOE | DATE | | | | | QA | CV | EC | EE | EM | IE | M | PD | SE | ST | XAD | PES |
|---|---|---|---|---|---|---|---|---|---|---|---|---|---|---|---|---|---|---|---|---|---|---|---|---|---|---|---|---|---|---|---|---|---|

REVISION OR ISSUE PURPOSE | REVISION APPROVALS | SQUAD CHECK

SCALE

TOLERANCES UNLESS OTHERWISE SPECIFIED
FRACTIONS :
XX DECIMALS ±.01
XXX DECIMALS ±.005
ANGLES ±0°15'
BREAK SHARP EDGES .06 MAX
FINISH .125 UNLESS OTHERWISE SPECIFIED

DES R.R. ALLEN
DRW E. ADAMS
CHK :
SECT :
DEPT :
PE :
CR :
PJ :
REQ :
DRAWING APPROVALS | DATE

LOCKHEED MARTIN — LOCKHEED MARTIN ENERGY SYSTEMS, INC.
operated for the DEPARTMENT OF ENERGY under U.S. GOVERNMENT contract DE-AC-05-84OR21400
Oak Ridge, Tennessee • Paducah, Kentucky

PROJECT NAME
SNS

TARGET SYSTEMS-
WINDOW ASSY, PROTON BEAM-
WBS 1.6.4.2

| 1 | 48 | 49 | 50 | PLANT | BLDG | FL | SHT | OF | TYPE | CLASS |
|---|---|---|---|---|---|---|---|---|---|---|
| 3 | M | E | U | | | | 1 | 4 | | U |

51 | 52 | 53 | M3E087000E201 | REV 0

NEXT ASS'Y: FINAL ASS'Y:

## NOTES

1. INTERPRET DRAWING PER MECHANICAL ENGINEERING DRAFTING STANDARD ES-3.1-2.
2. INTERPRET DIMENSIONS AND TOLERANCES PER ANSI Y14.5M.
3. DIMENSIONS ARE IN INCHES.

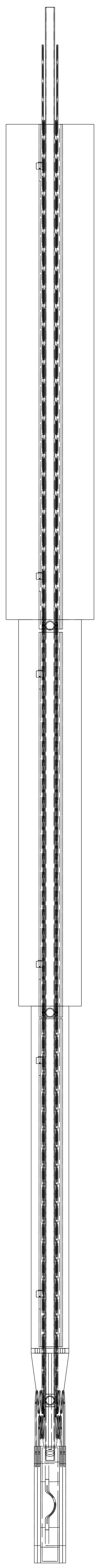

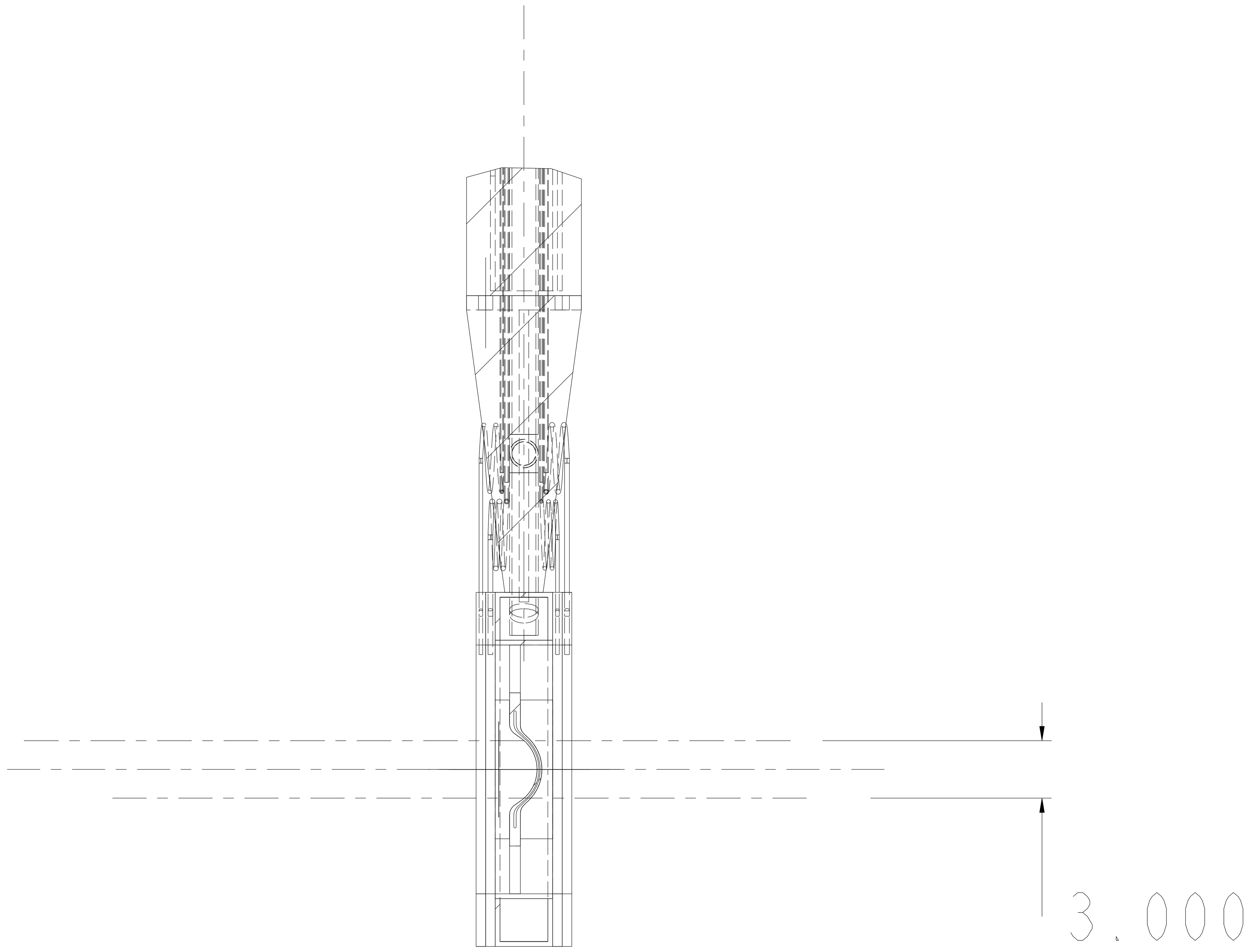


SECTION A-A

# PRELIMINARY

QUALITY VERIFICATION

MECHANICAL AND STRUCTURAL
REFERENCE ORNL QV-001

| QV CLAUSE | DOCUMENTS REQUIRED | APPLICABLE TO PART NO * |
|---|---|---|
| 303 | MATERIAL MILL TEST REPORT | X |
| 325 | MATERIAL SELLER CERT | X |
| 326 | SPECIAL MATERIAL INSPECTION REPORT | X |
| 205 | MANUFACTURING, INSPECTION, AND TEST PLAN | X |
| 312 | FIELD INSPECTION AND TEST PLAN | X |
| 321 | WELD AND BRAZE INSPECTION REPORT | X |
| 322 | HEAT TREAT REPORT (W/CHART) | X |
| 310 | LEAK TEST REPORT | X |
| 315 | CLEANING CERT | X |
| 318 | DEVIATION REQUEST | X |
| 319 | NONCONFORMANCE REPORT | X |
| 323 | DIMENSIONAL REPORT | X |
| 330 | FUNCTIONAL TEST REPORT | X |
| : | : | : |
| : | : | : |
| : | : | : |
| : | : | : |
| : | : | : |
| 100 | DOCUMENTION | X |

* SYMBOL X INDICATES APPLICABLE TO ALL PARTS OR ITEMS

QA COORDINATOR DATE

RPE

REV. XX DATE XX/XX/XX

M3E087000E201

NO REPRESENTATION OR WARRANTY, EXPRESSED OR IMPLIED, IS MADE AS TO THE ACCURACY, COMPLETENESS OR USEFULNESS OF THE INFORMATION OR STATEMENTS CONTAINED IN THESE DRAWINGS, OR THAT THE USE OR DISCLOSURE OF ANY INFORMATION, APPARATUS, METHOD OR PROCESS DISCLOSED IN THESE DRAWINGS MAY NOT INFRINGE PRIVATE RIGHTS OF OTHERS. NO LIABILITY IS ASSUMED WITH RESPECT TO THE USE OF, OR FOR DAMAGES RESULTING FROM THE USE OF, ANY INFORMATION, APPARATUS, METHOD OR PROCESS DISCLOSED IN THESE DRAWINGS. DRAWINGS MADE AVAILABLE FOR INFORMATION TO BIDDER ARE NOT TO BE USED FOR OTHER PURPOSES, AND ARE TO BE RETURNED UPON REQUEST OF THE FORWARDING CONTRACTOR.

P THIS DRAWING PRODUCED ON PRO-ENGINEER

THIS DOCUMENT CONTROLLED BY
CHANGE CONTROL SYSTEM___XXXX___
ENGINEERING PROCEDURE___XXXX___

| REV | CHANGE TYPE | CHANGE CONTROL SYSTEM | CHANGE REQUEST NUMBER | DESCRIPTION | A-E | BY | CHK | SECT | DEPT | DATE | PE | REQ | DATE | LM-ES | DATE | DOE | DATE | | | | QA | CV | EC | EE | EM | IE | M | PD | SE | ST | XAD | PES |
|---|---|---|---|---|---|---|---|---|---|---|---|---|---|---|---|---|---|---|---|---|---|---|---|---|---|---|---|---|---|---|---|---|

REVISION OR ISSUE PURPOSE — REVISION APPROVALS — SQUAD CHECK

SCALE

TOLERANCES UNLESS OTHERWISE SPECIFIED

FRACTIONS :
XX DECIMALS ±.01
XXX DECIMALS ±.005
ANGLES ±0°15'
BREAK SHARP EDGES .06 MAX
FINISH .125 UNLESS OTHERWISE SPECIFIED

| | | |
|---|---|---|
| DES | R.R. ALLEN | |
| DRW | E. ADAMS | |
| CHK | : | : |
| SECT | : | : |
| DEPT | : | : |
| PE | : | : |
| CR | : | : |
| PJ | : | : |
| REQ | : | : |
| | : | : |
| | : | : |
| | : | : |
| DRAWING APPROVALS | | DATE |

LOCKHEED MARTIN — LOCKHEED MARTIN ENERGY SYSTEMS, INC.
operated for the DEPARTMENT OF ENERGY under U.S. GOVERNMENT contract DE-AC-05-84OR21400
Oak Ridge, Tennessee • Paducah, Kentucky

PROJECT NAME
SNS

TARGET SYSTEMS-
WINDOW ASSY, PROTON BEAM-
WBS 1.6.4.2

| 1 | 48 | 49 | 50 | PLANT | BLDG | FL | SHT | OF | TYPE | CLASS |
|---|---|---|---|---|---|---|---|---|---|---|
| 3 | M | E | U | | | | 2 | 4 | | U |

51 52 53 REV 0

NEXT ASS'Y: FINAL ASS'Y:

## NOTES

1. INTERPRET DRAWING PER MECHANICAL ENGINEERING DRAFTING STANDARD ES-3.1-2.
2. INTERPRET DIMENSIONS AND TOLERANCES PER ANSI Y14.5M.
3. DIMENSIONS ARE IN INCHES.

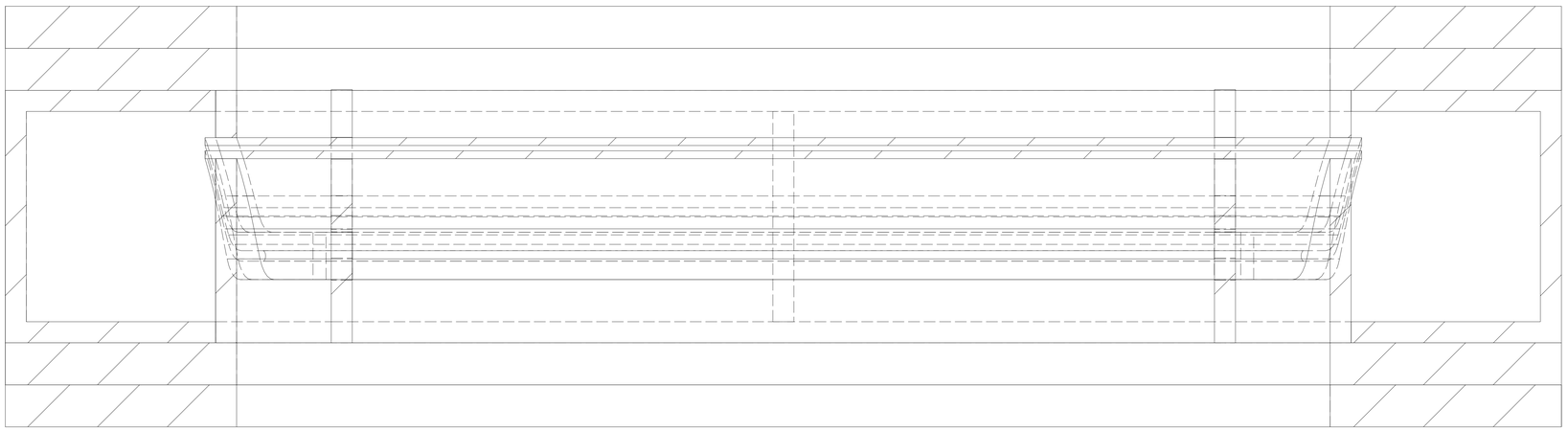

SECTION B-B

# PRELIMINARY

QUALITY VERIFICATION
MECHANICAL AND STRUCTURAL
REFERENCE ORNL QV-001

| QV CLAUSE | DOCUMENTS REQUIRED | APPLICABLE TO PART NO * |
|---|---|---|
| 303 | MATERIAL MILL TEST REPORT | X |
| 325 | MATERIAL SELLER CERT | X |
| 326 | SPECIAL MATERIAL INSPECTION REPORT | X |
| 205 | MANUFACTURING, INSPECTION, AND TEST PLAN | X |
| 312 | FIELD INSPECTION AND TEST PLAN | X |
| 321 | WELD AND BRAZE INSPECTION REPORT | X |
| 322 | HEAT TREAT REPORT (W/CHART) | X |
| 310 | LEAK TEST REPORT | X |
| 315 | CLEANING CERT | X |
| 318 | DEVIATION REQUEST | X |
| 319 | NONCONFORMANCE REPORT | X |
| 323 | DIMENSIONAL REPORT | X |
| 330 | FUNCTIONAL TEST REPORT | X |
| 100 | DOCUMENTION | X |

* SYMBOL X INDICATES APPLICABLE TO ALL PARTS OR ITEMS

QA COORDINATOR DATE

RPE

REV. XX DATE XX/XX/XX

M3E087000E201

NO REPRESENTATION OR WARRANTY,EXPRESSED OR IMPLIED,IS MADE AS TO THE ACCURACY, COMPLETENESS OR USEFULNESS OF THE INFORMATION OR STATEMENTS CONTAINED IN THESE DRAWINGS, OR THAT THE USE OR DISCLOSURE OF ANY INFORMATION, APPARATUS, METHOD OR PROCESS DISCLOSED IN THESE DRAWINGS MAY NOT INFRINGE PRIVATE RIGHTS OF OTHERS. NO LIABILITY IS ASSUMED WITH RESPECT TO THE USE OF, OR FOR DAMAGES RESULTING FROM THE USE OF, ANY INFORMATION, APPARATUS, METHOD OR PROCESS DISCLOSED IN THESE DRAWINGS. DRAWINGS MADE AVAILABLE FOR INFORMATION TO BIDDER ARE NOT TO BE USED FOR OTHER PURPOSES, AND ARE TO BE RETURNED UPON REQUEST OF THE FORWARDING CONTRACTOR.

P THIS DRAWING PRODUCED ON PRO-ENGINEER

THIS DOCUMENT CONTROLLED BY
CHANGE CONTROL SYSTEM___XXXX___
ENGINEERING PROCEDURE___XXXX___

| REV | CHANGE TYPE | CHANGE CONTROL SYSTEM | CHANGE CONTROL NUMBER | DESCRIPTION | A-E | BY | CHK | SECT | DEPT | DATE | PE | REQ | DATE | LM-ES | DATE | DOE | DATE | QA | CV | EC | EE | EM | IE | M | PD | SE | ST | XAD | PES |
|---|---|---|---|---|---|---|---|---|---|---|---|---|---|---|---|---|---|---|---|---|---|---|---|---|---|---|---|---|---|
| | | | | REVISION OR ISSUE PURPOSE | | | | | REVISION APPROVALS | | | | | | | | | SQUAD CHECK | | | | | | | | | | | |

SCALE

TOLERANCES UNLESS OTHERWISE SPECIFIED
FRACTIONS :
XX DECIMALS ±.01
XXX DECIMALS ±.005
ANGLES ±0°15'
BREAK SHARP EDGES .06 MAX
FINISH 125 UNLESS OTHERWISE SPECIFIED

| | | |
|---|---|---|
| DES | R.R. ALLEN | |
| DRW | E. ADAMS | |
| CHK | : | : |
| SECT | : | : |
| DEPT | : | : |
| PE | : | : |
| CR | : | : |
| PJ | : | : |
| REQ | : | : |
| | : | : |
| | : | : |
| | : | : |
| | DRAWING APPROVALS | DATE |

LOCKHEED MARTIN LOCKHEED MARTIN ENERGY SYSTEMS, INC.
operated for the DEPARTMENT OF ENERGY under U.S. GOVERNMENT contract DE-AC-05-84OR21400
Oak Ridge, Tennessee • Paducah, Kentucky

PROJECT NAME
SNS

TARGET SYSTEMS-
WINDOW ASSY, PROTON BEAM-
WBS 1.6.4.2

| 1 | 48 | 49 | 50 | PLANT | BLDG | FL | SHT | OF | TYPE | CLASS |
|---|---|---|---|---|---|---|---|---|---|---|
| 3 | M | E | U | | | | 3 | 4 | | U |
| | 51 | | 52 | 53 | | | | | | REV |
| | | | | | | | | | | 0 |

NOTES

1. INTERPRET DRAWING PER MECHANICAL ENGINEERING DRAFTING STANDARD ES-3.1-2.
2. INTERPRET DIMENSIONS AND TOLERANCES PER ANSI Y14.5M.
3. DIMENSIONS ARE IN INCHES.

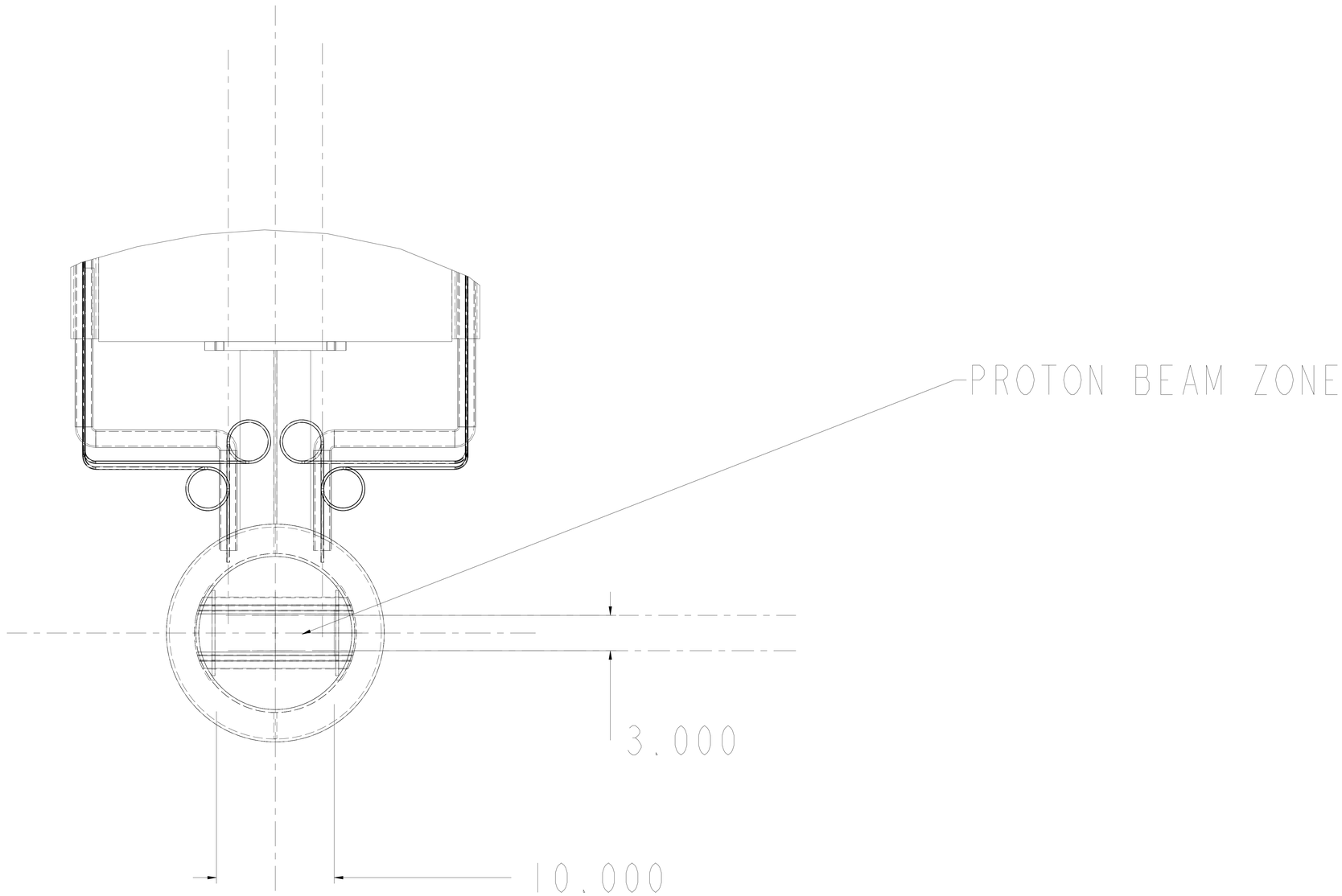


# PRELIMINARY

QUALITY VERIFICATION
MECHANICAL AND STRUCTURAL
REFERENCE ORNL QV-001

| QV CLAUSE | DOCUMENTS REQUIRED | APPLICABLE TO PART NO ♦ |
|---|---|---|
| 303 | MATERIAL MILL TEST REPORT | X |
| 325 | MATERIAL SELLER CERT | X |
| 326 | SPECIAL MATERIAL INSPECTION REPORT | X |
| 205 | MANUFACTURING, INSPECTION, AND TEST PLAN | X |
| 312 | FIELD INSPECTION AND TEST PLAN | X |
| 321 | WELD AND BRAZE INSPECTION REPORT | X |
| 322 | HEAT TREAT REPORT (W/CHART) | X |
| 310 | LEAK TEST REPORT | X |
| 315 | CLEANING CERT | X |
| 318 | DEVIATION REQUEST | X |
| 319 | NONCONFORMANCE REPORT | X |
| 323 | DIMENSIONAL REPORT | X |
| 330 | FUNCTIONAL TEST REPORT | X |
| : | : | : |
| : | : | : |
| : | : | : |
| : | : | : |
| : | : | : |
| 100 | DOCUMENTION | X |

♦ SYMBOL X INDICATES APPLICABLE TO ALL PARTS OR ITEMS

QA COORDINATOR ..... DATE .....

RPE

REV. XX DATE XX/XX/XX

M3E087000E201

NO REPRESENTATION OR WARRANTY,EXPRESSED OR IMPLIED,IS MADE AS TO THE ACCURACY, COMPLETENESS OR USEFULNESS OF THE INFORMATION OR STATEMENTS CONTAINED IN THESE DRAWINGS; OR THAT THE USE OR DISCLOSURE OF ANY INFORMATION, APPARATUS, METHOD OR PROCESS DISCLOSED IN THESE DRAWINGS MAY NOT INFRINGE PRIVATE RIGHTS OF OTHERS. NO LIABILITY IS ASSUMED WITH RESPECT TO THE USE OF, OR FOR DAMAGES RESULTING FROM THE USE OF, ANY INFORMATION, APPARATUS, METHOD OR PROCESS DISCLOSED IN THESE DRAWINGS. DRAWINGS MADE AVAILABLE FOR INFORMATION TO BIDDER ARE NOT TO BE USED FOR OTHER PURPOSES, AND ARE TO BE RETURNED UPON REQUEST OF THE FORWARDING CONTRACTOR.

P THIS DRAWING PRODUCED ON PRO-ENGINEER

THIS DOCUMENT CONTROLLED BY
CHANGE CONTROL SYSTEM___XXXX___
ENGINEERING PROCEDURE___XXXX___

| REV | CHANGE TYPE | CHANGE CONTROL SYSTEM | CHANGE REQUEST NUMBER | DESCRIPTION | A-E | BY | CHK | SECT | DEPT | DATE | PE | REQ | DATE | LM-ES | DATE | DOE | DATE | QA | CV | EC | EE | EM | IE | M | PD | SE | ST | XAD | PES |
|---|---|---|---|---|---|---|---|---|---|---|---|---|---|---|---|---|---|---|---|---|---|---|---|---|---|---|---|---|---|
| | | | | REVISION OR ISSUE PURPOSE | | | | | | | | REVISION APPROVALS | | | | | | | | | | SQUAD CHECK | | | | | | | |

SCALE

TOLERANCES UNLESS OTHERWISE SPECIFIED
FRACTIONS ±.01
XX DECIMALS ±.005
XXX DECIMALS ±.005
ANGLES ±0°15'
BREAK SHARP EDGES .06 MAX
FINISH .125 UNLESS OTHERWISE SPECIFIED

| DRAWING APPROVALS | | DATE |
|---|---|---|
| DES | R.R. ALLEN | |
| DRW | E. ADAMS | |
| CHK | : | : |
| SECT | : | : |
| DEPT | : | : |
| PE | : | : |
| CR | : | : |
| PJ | : | : |
| REQ | : | : |
| | : | : |
| | : | : |
| | : | : |

LOCKHEED MARTIN LOCKHEED MARTIN ENERGY SYSTEMS, INC.
operated for the DEPARTMENT OF ENERGY under U.S. GOVERNMENT contract DE-AC-05-84OR21400
Oak Ridge, Tennessee • Paducah, Kentucky

PROJECT NAME
SNS

TARGET SYSTEMS-
WINDOW ASSY, PROTON BEAM-
WBS 1.6.4.2

| 1 | 48 | 49 | 50 | PLANT | BLDG | FL | SHT | OF | TYPE | CLASS |
|---|---|---|---|---|---|---|---|---|---|---|
| 3 | M | E | U | | | | 4 | 4 | | U |
| 51 | | 52 | | 53 | | | | | | REV |
| | | | | | | | | | | 0 |