NEXT ASS'Y: | FINAL ASS'Y: 1

NOTES

1. INTERPRET DRAWING PER MECHANICAL ENGINEERING DRAFTING STANDARD ES-3.1-2.
2. INTERPRET DIMENSIONS AND TOLERANCES PER ANSI Y14.5M.
3. DIMENSIONS ARE IN INCHES.

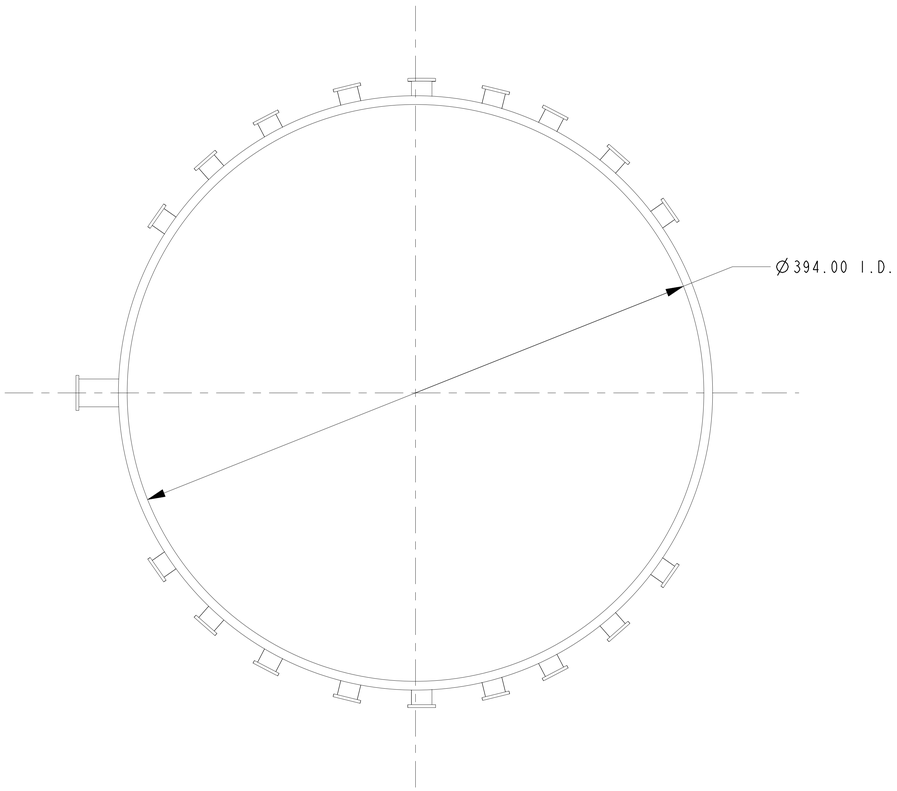

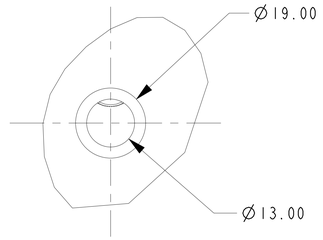

DETAIL C
SCALE 0.063
TYP

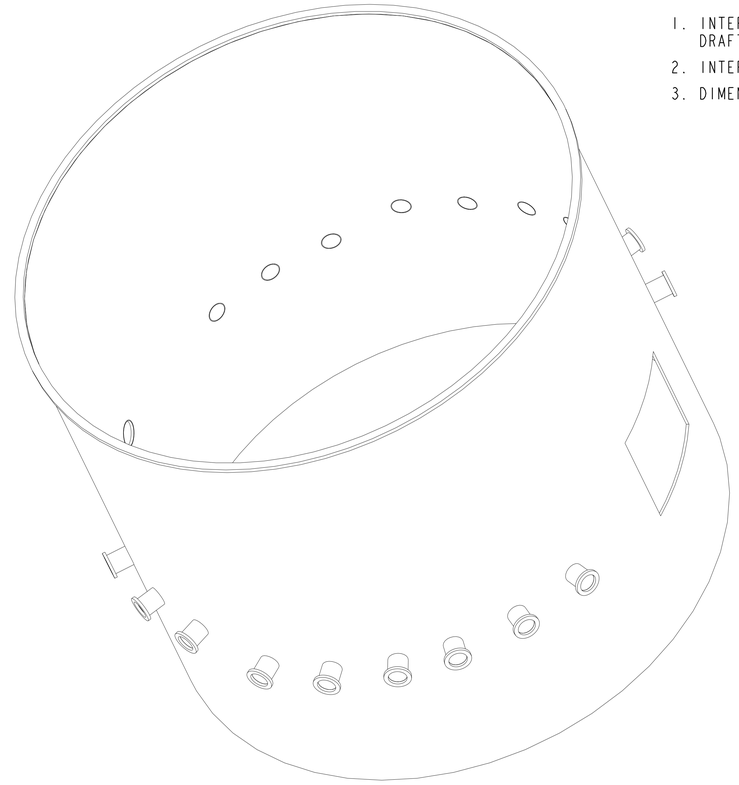

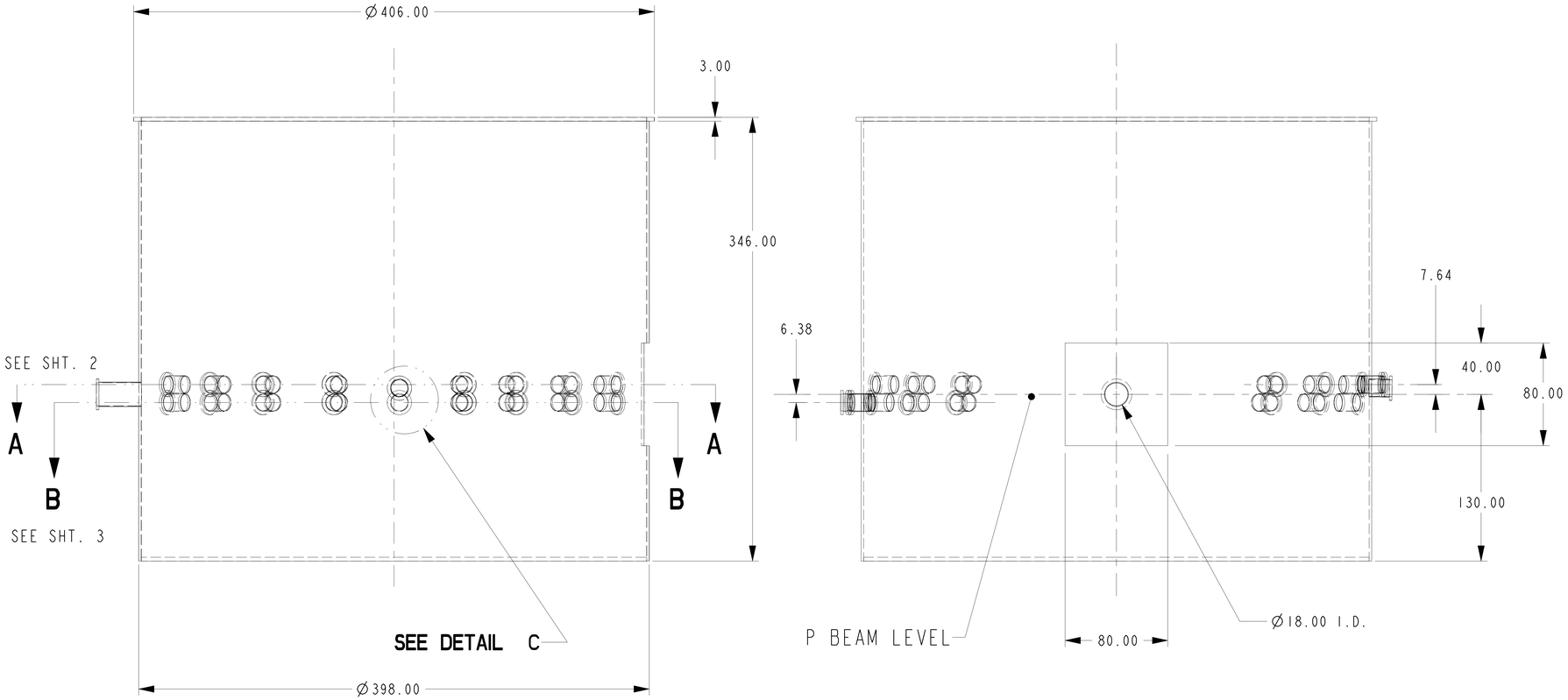

next assy	I	CAGE CODE	PART OR IDENTIFYING NO	NOMENCLATURE OR DESCRIPTION	MATERIAL	SPECIFICATION	FIND NO
	I		652SHLDWELDMENT	--			23
	I		652SHLDTUBEASSY9BU	--			22
	I		652SHLDTUBEASSY8BU	--			21
	I		652SHLDTUBEASSY7BU	--			20
	I		652SHLDTUBEASSY6BD	--			19
	I		652SHLDTUBEASSY5BD	--			18
	I		652SHLDTUBEASSY4BD	--			17
	I		652SHLDTUBEASSY3TU	--			16
	I		652SHLDTUBEASSY2TU	--			15
	I		652SHLDTUBEASSY1TU	--			14
	I		652SHLDTUBEASSY18BU	--			13
	I		652SHLDTUBEASSY17BU	--			12
	I		652SHLDTUBEASSY16BU	--			11
	I		652SHLDTUBEASSY14TD	--			10
	I		652SHLDTUBEASSY13TD	--			9
	I		652SHLDTUBEASSY12TU	--			8
	I		652SHLDTUBEASSY11TU	--			7
	I		652SHLDTUBEASSY10TU	--			6
	I		652SHLDTUBEASST15TD	--			5
	I		652PROBEAMTUBEASSY	--			4
	I		652ENCLOSVESTUBE	--	--	--	3
	I		652ENCLOSVESFLG	--	--	--	2
	I		652ENCLOSVESBOTTOM	--	--	--	1

NEXT ASSEMBLY — PARTS LIST

QUALITY VERIFICATION

MECHANICAL AND STRUCTURAL
REFERENCE ORNL QV-001

QV CLAUSE	DOCUMENTS REQUIRED	APPLICABLE TO PART NO *
303	MATERIAL MILL TEST REPORT	X
325	MATERIAL SELLER CERT	X
326	SPECIAL MATERIAL INSPECTION REPORT	X
205	MANUFACTURING, INSPECTION, AND TEST PLAN	X
312	FIELD INSPECTION AND TEST PLAN	X
321	WELD AND BRAZE INSPECTION REPORT	X
322	HEAT TREAT REPORT (W/CHART)	X
310	LEAK TEST REPORT	X
315	CLEANING CERT	X
318	DEVIATION REQUEST	X
319	NONCONFORMANCE REPORT	X
323	DIMENSIONAL REPORT	X
330	FUNCTIONAL TEST REPORT	X
:	:	:
:	:	:
:	:	:
:	:	:
:	:	:
:	:	:
100	DOCUMENTION	X

* SYMBOL X INDICATES APPLICABLE TO ALL PARTS OR ITEMS

QA COORDINATOR ..... DATE .....

RPE

REV. XX DATE XX/XX/XX

M3E087000F301

NO REPRESENTATION OR WARRANTY,EXPRESSED OR IMPLIED,IS MADE AS TO THE ACCURACY, COMPLETENESS OR USEFULNESS OF THE INFORMATION OR STATEMENTS CONTAINED IN THESE DRAWINGS; OR THAT THE USE OR DISCLOSURE OF ANY INFORMATION, APPARATUS, METHOD OR PROCESS DISCLOSED IN THESE DRAWINGS MAY NOT INFRINGE PRIVATE RIGHTS OF OTHERS. NO LIABILITY IS ASSUMED WITH RESPECT TO THE USE OF, OR FOR DAMAGES RESULTING FROM THE USE OF, ANY INFORMATION, APPARATUS, METHOD OR PROCESS DISCLOSED IN THESE DRAWINGS. DRAWINGS MADE AVAILABLE FOR INFORMATION TO BIDDER ARE NOT TO BE USED FOR OTHER PURPOSES, AND ARE TO BE RETURNED UPON REQUEST OF THE FORWARDING CONTRACTOR.

P THIS DRAWING PRODUCED ON PRO-ENGINEER

THIS DOCUMENT CONTROLLED BY
CHANGE CONTROL SYSTEM___XXXX___
ENGINEERING PROCEDURE___XXXX___

REV	CHANGE TYPE	CHANGE CONTROL SYSTEM	CHANGE REQUEST NUMBER	DESCRIPTION (REVISION OR ISSUE PURPOSE)	A-E	BY	CHK	SECT	DEPT	DATE	PE	REQ	DATE	LM-ES	DATE	DOE	DATE	QA	CV	EC	EE	EM	IE	M	PD	SE	ST	XAD	PES

REVISION APPROVALS — SQUAD CHECK

SCALE .025 & NOTED
TOLERANCES UNLESS OTHERWISE SPECIFIED
FRACTIONS ±.01
XX DECIMALS ±.01
XXX DECIMALS ±.005
ANGLES ±0°15'
BREAK SHARP EDGES .06 MAX
FINISH 125 UNLESS OTHERWISE SPECIFIED

		DATE
DES		
DRW	R. HUERTO	11/20/98
CHK		
SECT		
DEPT		
PE		
CR		
PJ		
REQ		

DRAWING APPROVALS

LOCKHEED MARTIN — LOCKHEED MARTIN ENERGY SYSTEMS, INC.
operated for the DEPARTMENT OF ENERGY under U.S. GOVERNMENT contract DE-AC-05-84OR21400
Oak Ridge, Tennessee • Paducah, Kentucky

PROJECT NAME
SNS

TARGET SYSTEMS SHIELDING 652 SHIELD ENCLOSURE WELDMENT ASSEMBLY

1	48	49	50	PLANT	BLDG	FL	SHT	OF	TYPE	CLASS
3	M	E	U				1	3		

51 52 53 M3E087000F301 REV

NOTES

1. INTERPRET DRAWING PER MECHANICAL ENGINEERING DRAFTING STANDARD ES-3.1-2.
2. INTERPRET DIMENSIONS AND TOLERANCES PER ANSI Y14.5M.
3. DIMENSIONS ARE IN INCHES.

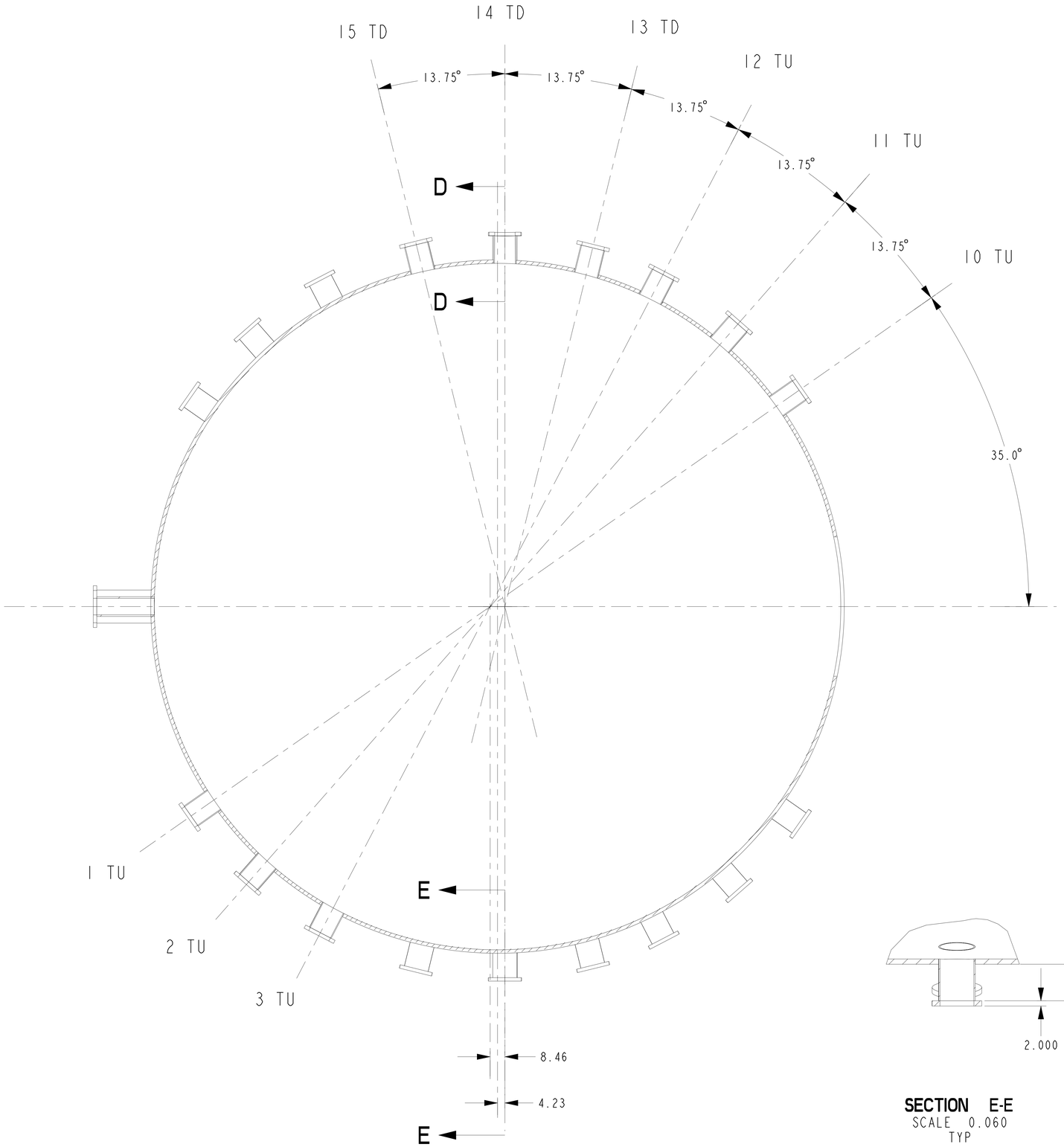

SECTION A-A
SCALE 0.040

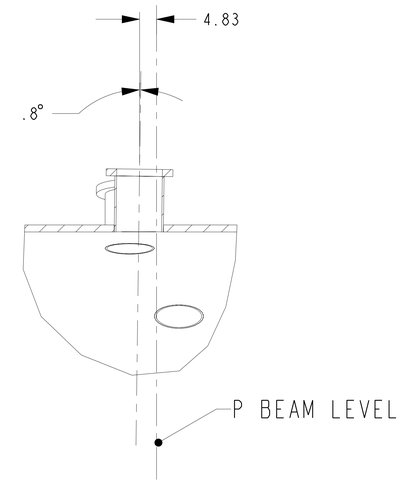

SECTION D-D
SCALE 0.060
(14 TD ONLY)

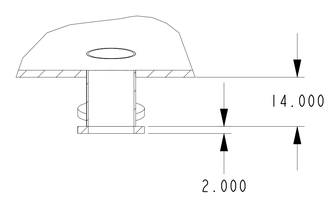

SECTION E-E
SCALE 0.060
TYP

next assy	CAGE CODE	PART OR IDENTIFYING NO	NOMENCLATURE OR DESCRIPTION	MATERIAL	SPECIFICATION	FIND NO
	1	652SHLDWELDMENT	--			23
	1	652SHLDTUBEASSY9BU	--			22
	1	652SHLDTUBEASSY8BU	--			21
	1	652SHLDTUBEASSY7BU	--			20
	1	652SHLDTUBEASSY6BD	--			19
	1	652SHLDTUBEASSY5BD	--			18
	1	652SHLDTUBEASSY4BD	--			17
	1	652SHLDTUBEASSY3TU	--			16
	1	652SHLDTUBEASSY2TU	--			15
	1	652SHLDTUBEASSY1TU	--			14
	1	652SHLDTUBEASSY18BU	--			13
	1	652SHLDTUBEASSY17BU	--			12
	1	652SHLDTUBEASSY16BU	--			11
	1	652SHLDTUBEASSY14TD	--			10
	1	652SHLDTUBEASSY13TD	--			9
	1	652SHLDTUBEASSY12TU	--			8
	1	652SHLDTUBEASSY11TU	--			7
	1	652SHLDTUBEASSY10TU	--			6
	1	652SHLDTUBEASST15TD	--			5
	1	652PROBEAMTUBEASSY	--			4
	1	652ENCLOSVESTUBE	--	--	--	3
	1	652ENCLOSVESFLG	--	--	--	2
	1	652ENCLOSVESBOTTOM	--	--	--	1
	- 1	NEXT ASSEMBLY	PARTS LIST			

QUALITY VERIFICATION
MECHANICAL AND STRUCTURAL
REFERENCE ORNL QV-001

QV CLAUSE	DOCUMENTS REQUIRED	APPLICABLE TO PART NO *
303	MATERIAL MILL TEST REPORT	X
325	MATERIAL SELLER CERT	X
326	SPECIAL MATERIAL INSPECTION REPORT	X
205	MANUFACTURING, INSPECTION, AND TEST PLAN	X
312	FIELD INSPECTION AND TEST PLAN	X
321	WELD AND BRAZE INSPECTION REPORT	X
322	HEAT TREAT REPORT (FURNACE)	X
310	LEAK TEST REPORT	X
315	CLEANING CERT	X
318	DEVIATION REQUEST	X
319	NONCONFORMANCE REPORT	X
323	DIMENSIONAL REPORT	X
330	FUNCTIONAL TEST REPORT	X
100	DOCUMENTION	X

* SYMBOL X INDICATES APPLICABLE TO ALL PARTS OR ITEMS

QA COORDINATOR ..... DATE .....

RPE

REV. XX DATE XX/XX/XX

M3E087000F301

NO REPRESENTATION OR WARRANTY,EXPRESSED OR IMPLIED,IS MADE AS TO THE ACCURACY, COMPLETENESS OR USEFULNESS OF THE INFORMATION OR STATEMENTS CONTAINED IN THESE DRAWINGS, OR THAT THE USE OR DISCLOSURE OF ANY INFORMATION, APPARATUS, METHOD OR PROCESS DISCLOSED IN THESE DRAWINGS MAY NOT INFRINGE PRIVATE RIGHTS OF OTHERS. NO LIABILITY IS ASSUMED WITH RESPECT TO THE USE OF, OR FOR DAMAGES RESULTING FROM THE USE OF, ANY INFORMATION, APPARATUS, METHOD OR PROCESS DISCLOSED IN THESE DRAWINGS. DRAWINGS MADE AVAILABLE FOR INFORMATION TO BIDDER ARE NOT TO BE USED FOR OTHER PURPOSES, AND ARE TO BE RETURNED UPON REQUEST OF THE FORWARDING CONTRACTOR.

P THIS DRAWING PRODUCED ON PRO-ENGINEER

THIS DOCUMENT CONTROLLED BY
CHANGE CONTROL SYSTEM___XXXX___
ENGINEERING PROCEDURE___XXXX___

REV	CHANGE TYPE	CHANGE CONTROL SYSTEM	CHANGE REQUEST NUMBER	DESCRIPTION	A-E	BY	CHK	SECT	DEPT	DATE	PE	REQ	DATE	LM-ES	DATE	DOE	DATE	QA	CV	EC	EE	EM	IE	M	PD	SE	ST	XAD	PES
				REVISION OR ISSUE PURPOSE								REVISION APPROVALS										SQUAD CHECK							

SCALE: NOTED

TOLERANCES UNLESS OTHERWISE SPECIFIED
FRACTIONS :
XX DECIMALS ±.01
XXX DECIMALS ±.005
ANGLES ±0°15'
BREAK SHARP EDGES .06 MAX
FINISH .125 UNLESS OTHERWISE SPECIFIED

DES		
DRW	: R. HUERTO	11/20/98
CHK	:	:
SECT	:	:
DEPT	:	:
PE	:	:
CR	:	:
PJ	:	:
REQ	:	:
	:	:
	:	:
	:	:
	:	:
	:	DATE

DRAWING APPROVALS

LOCKHEED MARTIN LOCKHEED MARTIN ENERGY SYSTEMS, INC.
operated for the DEPARTMENT OF ENERGY under U.S. GOVERNMENT contract DE-AC-05-84OR21400
Oak Ridge, Tennessee • Paducah, Kentucky

PROJECT NAME
SNS

TARGET SYSTEMS SHIELDING
652 SHIELD ENCLOSURE WELDMENT
ASSEMBLY

1	48	49	50	PLANT	BLDG	FL	SHT OF	TYPE	CLASS
3	M	E	U				2 3		
51		52		53	M3E087000F301				REV

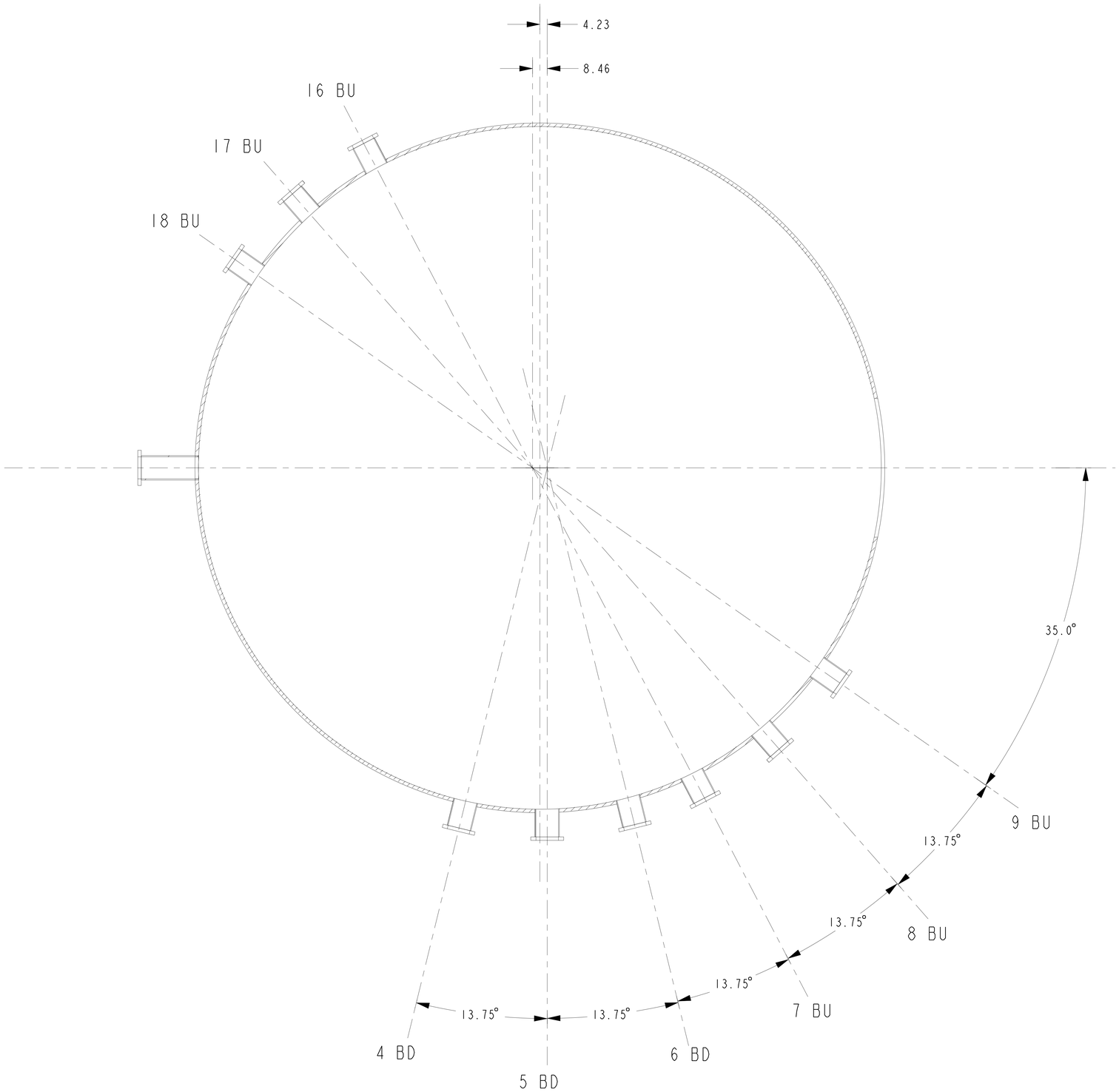

SECTION B-B
SCALE 0.040

NOTES

1. INTERPRET DRAWING PER MECHANICAL ENGINEERING DRAFTING STANDARD ES-3.1-2.
2. INTERPRET DIMENSIONS AND TOLERANCES PER ANSI Y14.5M.
3. DIMENSIONS ARE IN INCHES.

next assy	-	CAGE CODE	PART OR IDENTIFYING NO	NOMENCLATURE OR DESCRIPTION	MATERIAL	SPECIFICATION	FIND NO
	1		652SHLDWELDMENT	--			23
	1		652SHLDTUBEASSY9BU	--			22
	1		652SHLDTUBEASSY8BU	--			21
	1		652SHLDTUBEASSY7BU	--			20
	1		652SHLDTUBEASSY6BD	--			19
	1		652SHLDTUBEASSY5BD	--			18
	1		652SHLDTUBEASSY4BD	--			17
	1		652SHLDTUBEASSY3TU	--			16
	1		652SHLDTUBEASSY2TU	--			15
	1		652SHLDTUBEASSY1TU	--			14
	1		652SHLDTUBEASSY18BU	--			13
	1		652SHLDTUBEASSY17BU	--			12
	1		652SHLDTUBEASSY16BU	--			11
	1		652SHLDTUBEASSY14TD	--			10
	1		652SHLDTUBEASSY13TD	--			9
	1		652SHLDTUBEASSY12TU	--			8
	1		652SHLDTUBEASSY11TU	--			7
	1		652SHLDTUBEASSY10TU	--			6
	1		652SHLDTUBEASST15TD	--			5
	1		652PROBEAMTUBEASSY	--			4
	1		652ENCLOSVESTUBE	--	--	--	3
	1		652ENCLOSVESFLG	--	--	--	2
	1		652ENCLOSVESBOTTOM	--	--	--	1
			NEXT ASSEMBLY		PARTS LIST		

QUALITY VERIFICATION
MECHANICAL AND STRUCTURAL
REFERENCE ORNL QV-001

QV CLAUSE	DOCUMENTS REQUIRED	APPLICABLE TO PART NO *
303	MATERIAL MILL TEST REPORT	X
325	MATERIAL SELLER CERT	X
326	SPECIAL MATERIAL INSPECTION REPORT	X
205	MANUFACTURING, INSPECTION, AND TEST PLAN	X
312	FIELD INSPECTION AND TEST PLAN	X
321	WELD AND BRAZE INSPECTION REPORT	X
322	HEAT TREAT REPORT (FURNACE)	X
310	LEAK TEST REPORT	X
315	CLEANING CERT	X
318	DEVIATION REQUEST	X
319	NONCONFORMANCE REPORT	X
323	DIMENSIONAL REPORT	X
330	FUNCTIONAL TEST REPORT	X
100	DOCUMENTION	X

* SYMBOL X INDICATES APPLICABLE TO ALL PARTS OR ITEMS

QA COORDINATOR ..... DATE .....

RPE

REV. XX DATE XX/XX/XX

M3E087000F301

NO REPRESENTATION OR WARRANTY, EXPRESSED OR IMPLIED, IS MADE AS TO THE ACCURACY, COMPLETENESS OR USEFULNESS OF THE INFORMATION OR STATEMENTS CONTAINED IN THESE DRAWINGS, OR THAT THE USE OR DISCLOSURE OF ANY INFORMATION, APPARATUS, METHOD OR PROCESS DISCLOSED IN THESE DRAWINGS MAY NOT INFRINGE PRIVATE RIGHTS OF OTHERS. NO LIABILITY IS ASSUMED WITH RESPECT TO THE USE OF, OR FOR DAMAGES RESULTING FROM THE USE OF, ANY INFORMATION, APPARATUS, METHOD OR PROCESS DISCLOSED IN THESE DRAWINGS. DRAWINGS MADE AVAILABLE FOR INFORMATION TO BIDDER ARE NOT TO BE USED FOR OTHER PURPOSES, AND ARE TO BE RETURNED UPON REQUEST OF THE FORWARDING CONTRACTOR.

P THIS DRAWING PRODUCED ON PRO-ENGINEER

THIS DOCUMENT CONTROLLED BY
CHANGE CONTROL SYSTEM___XXXX___
ENGINEERING PROCEDURE___XXXX___

REV	CHANGE TYPE	CHANGE CONTROL SYSTEM	CHANGE REQUEST NUMBER	DESCRIPTION	A-E	BY	CHK	SECT	DEPT	DATE	PE	REQ	DATE	LM-ES	DATE	DOE	DATE	QA	CV	EC	EE	EM	IE	M	PD	SE	ST	XAD	PES
				REVISION OR ISSUE PURPOSE					REVISION APPROVALS									SQUAD CHECK											

SCALE: .040

TOLERANCES UNLESS OTHERWISE SPECIFIED
FRACTIONS :
XX DECIMALS ±.01
XXX DECIMALS ±.005
ANGLES ±0°15'
BREAK SHARP EDGES .06 MAX
FINISH .125 UNLESS OTHERWISE SPECIFIED

DRAWING APPROVALS		DATE
DES		
DRW	: R. HUERTO	11/20/98
CHK	:	:
SECT	:	:
DEPT	:	:
PE	:	:
CR	:	:
PJ	:	:
REQ	:	:
	:	:
	:	:
	:	:

LOCKHEED MARTIN — LOCKHEED MARTIN ENERGY SYSTEMS, INC.
operated for the DEPARTMENT OF ENERGY under U.S. GOVERNMENT contract DE-AC-05-84OR21400
Oak Ridge, Tennessee • Paducah, Kentucky

PROJECT NAME
SNS

TARGET SYSTEMS SHIELDING
652 SHIELD ENCLOSURE WELDMENT
ASSEMBLY

1	48	49	50	PLANT	BLDG	FL	SHT	OF	TYPE	CLASS
3	M	E	U				3	3		
51		52		53	M3E087000F301					REV