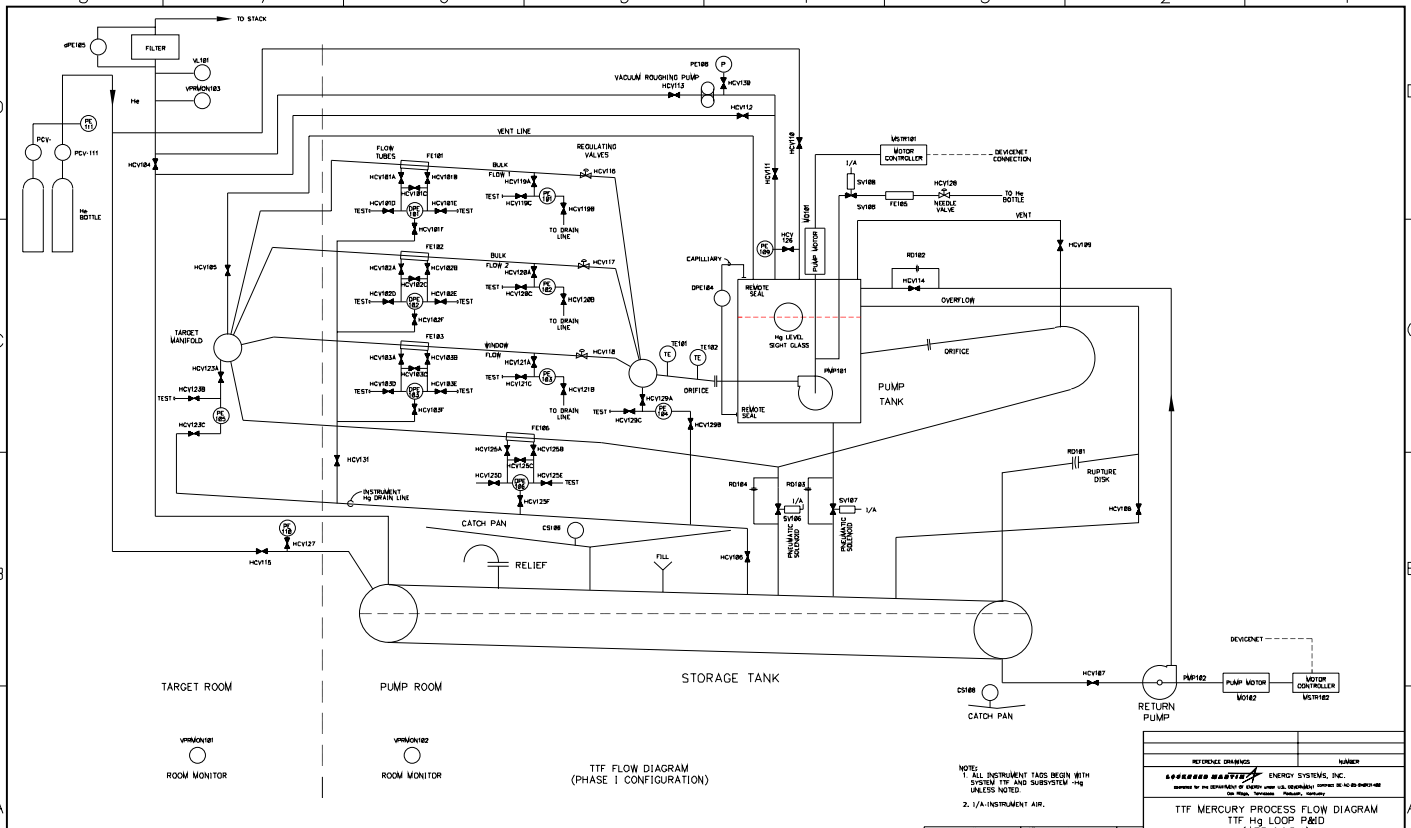

TTF FLOW DIAGRAM
(PHASE I CONFIGURATION)

NOTE:
1. ALL INSTRUMENT TAGS BEGIN WITH SYSTEM TTF AND SUBSYSTEM -Hg UNLESS NOTED.
2. I/A-INSTRUMENT AIR.

REFERENCE DRAWINGS	NUMBER

LOCKHEED MARTIN ENERGY SYSTEMS, INC.
OPERATED BY THE DEPARTMENT OF ENERGY UNDER U.S. GOVERNMENT CONTRACT DE-AC-05-84OR21400
Oak Ridge, Tennessee Paducah, Kentucky

TTF MERCURY PROCESS FLOW DIAGRAM
TTF Hg LOOP P&ID
(WBS 1.1.5.4)

TOLERANCES UNLESS OTHERWISE SPECIFIED	DRAWN BY R.W. JONES
FRACTIONS ± 1/64"	DRAWING CHECK
XX DECIMALS ± .015"	ENGINEER
XXX DECIMALS ± .005"	APPROVED
ANGLES ± 0° 30'	
BREAK SHARP EDGES	

DRAWING APPROVALS	DATE

FILE DATE	FILE POINT	BLDG	SHT.	OF	TYPE
		7601	1	1	MF

SCALE	ID	REV
	I&C	13E0B7000A012	0

THIS DRAWING PRODUCED BY OPR. INSTRUMENTATION & CONTROLS DIVISION CAD SYSTEM AutoCAD 10 CAD FILENAME

REV.	MF	DESCRIPTION	FILE DATE	BY	CHKD	ENGR	APVD
0							

REVISION OR ISSUE PURPOSE — APPROVALS