NEXT ASS'Y: FINAL ASS'Y:

NOTES

1. INTERPRET DRAWING PER GLOBAL ENGINEERING DOCUMENTS DRAWING REQUIREMENTS MANUAL.
2. INTERPRET DIMENSIONS AND TOLERANCES PER ASME Y14.5M.
3. DIMENSIONS ARE IN INCHES.
4. BUTTON HEAD CAPSCREWS, FIND NO. 10, SHALL BE INSTALLED WITH LOCTITE, FIND NO. 12, IN ACCORDANCE WITH LOCTITE PROCEDURES AND TIGHTENED TO 35 IN.-LBS.
5. FLAT HEAD CAP SCREWS, FIND NO. 11, SHALL BE INSTALLED WITH LOCTITE, FIND NO. 12, IN ACCORDANCE WITH LOCTITE PROCEDURES AND TIGHTENED TO 35 IN.-LBS.
6. UNBRAKO DIV/SPS TECHNOLOGIES, 4444 LEE RD. CLEVELAND OHIO 44128
7. LOCTITE CORPORATION, 1001 TROUT BROOK CROSSING, ROCK HILL, CT. 06067-3910.
8. GUIDE LOWER SHIM THICKNESS SHALL BE DETERMINED AT FINAL ASSEMBLY.
9. BALL GUIDE SHIM THICKNESS SHALL BE DETERMINED AT FINAL ASSEMBLY.

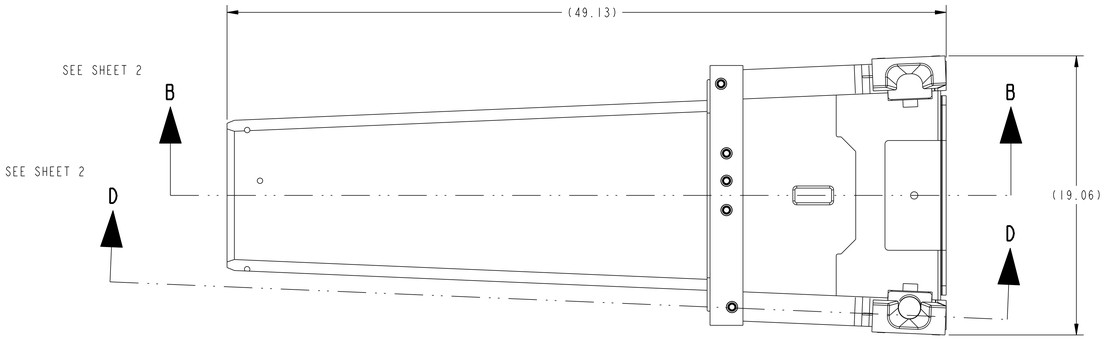

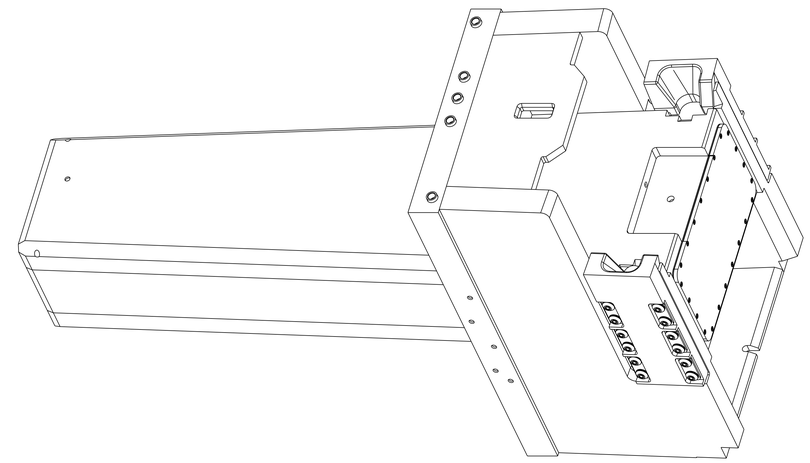

PICTORIAL VIEW
SCALE 0.250

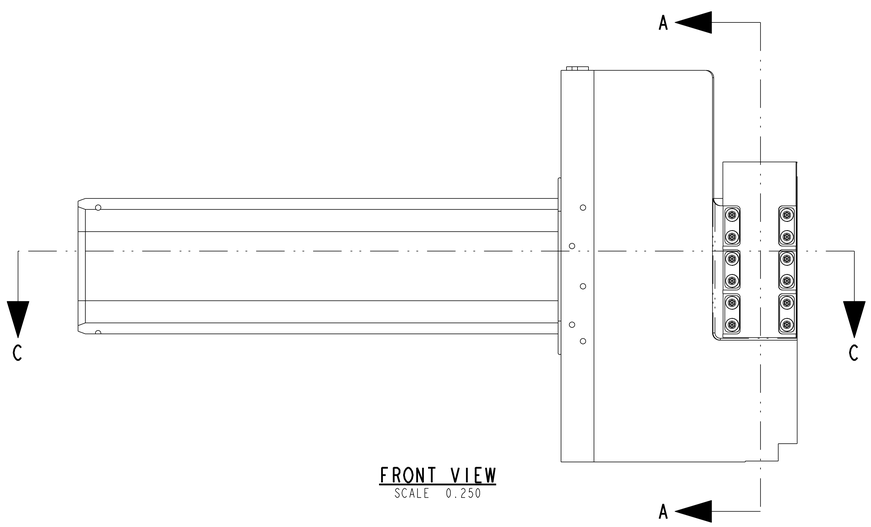

FRONT VIEW
SCALE 0.250

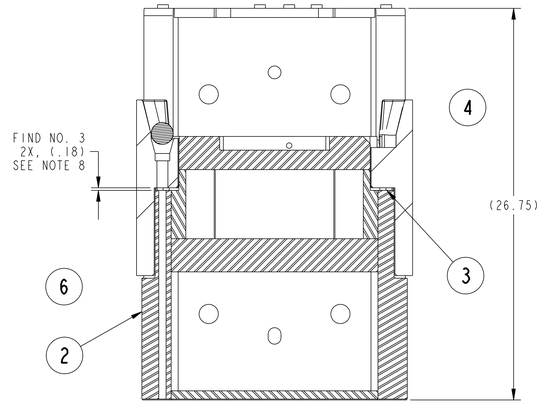

SECTION A-A

			7								
5	6	7			36		T3585-3C380	#10-24" UNC HELI-CAL SCR LOCK INS	STAINLESS STEEL	SS 18-8	18
	4	7			40		72531-3C-10U	LHCS #10-24UNC X .625 LG.	ALLOY STEEL	AISI 4140	17
					1		107030600M8E8700A147-1	MULTI INSERT REAR WINDOW	ALUMINUM	6061-T6	16
					1		107030600M8E8700A146-1	MULTI INSERT REAR GASKET	ALUMINUM	1100-T0	15
					1		107030600M8E8700A145-1	MULTI INSERT FRONT WINDOW	ALUMINUM	6061-T6	14
					1		107030600M8E8700A144-1	MULTI INSERT FRONT GASKET	ALUMINUM	1100-T0	13
		9			1		271-LOCTITE	RETAINING COMPOUND	PURCHASED	---	12
					4		16990-94C-8U	FHCS #4-40 UNC X 0.50" LG	ALLOY STEEL	AISI 4140	11
		8			1		107030600M8E8700A172-1	MULTI C V INS GSKT ASSY	--	--	8
					1		107030600M8E8700A109-1	MULTI C.V. INSERT W/ WINDOW	---	---	2
					1		107030600M8E8700A108-1	MULTI C V INSERT W/ALIGNMENTS	---	---	1
107030600M8E8700A107 / 107030600M8E8700A106				-1		CAGE CODE	PART OR IDENTIFYING NO	NOMENCLATURE OR DESCRIPTION	MATERIAL	SPECIFICATION	FIND NO
							NEXT ASSEMBLY	PARTS LIST			

QUALITY VERIFICATION
MECHANICAL AND STRUCTURAL
REFERENCE SNS-QA-G002

QV CLAUSE	DOCUMENTS REQUIRED	APPLICABLE TO PART NO *
303	MATERIAL MILL TEST REPORT	-
325	MATERIAL SELLER CERT	-
326	SPECIAL MATERIAL INSPECTION REPORT	-
205	MANUFACTURING, INSPECTION, AND TEST PLAN	-
312	FIELD INSPECTION AND TEST PLAN	-
321	WELD AND BRAZE INSPECTION REPORT	-
322	HEAT TREAT REPORT (W/CHART)	-
310	LEAK TEST REPORT	-
315	CLEANING CERT	-
318	DEVIATION REQUEST	-
319	NONCONFORMANCE PROCESS	-
323	DIMENSIONAL REPORT	-
330	FUNCTIONAL TEST REPORT	-
:	:	:
:	:	:
:	:	:
:	:	:
:	:	:
100	DOCUMENTATION	-

* SYMBOL X INDICATES APPLICABLE TO ALL PARTS OR ITEMS

QA REP ..... DATE .....

RPE

REV. XX DATE XX/XX/XX

APPROXIMATE WEIGHT: 1,593 LBS.

PRELIMINARY

NO REPRESENTATION OR WARRANTY, EXPRESSED OR IMPLIED, IS MADE AS TO THE ACCURACY, COMPLETENESS OR USEFULNESS OF THE INFORMATION OR STATEMENTS CONTAINED IN THESE DRAWINGS, OR THAT THE USE OR DISCLOSURE OF ANY INFORMATION, APPARATUS, METHOD OR PROCESS DISCLOSED IN THESE DRAWINGS MAY NOT INFRINGE PRIVATE RIGHTS OF OTHERS. NO LIABILITY IS ASSUMED WITH RESPECT TO THE USE OF, OR FOR DAMAGES RESULTING FROM THE USE OF, ANY INFORMATION, APPARATUS, METHOD OR PROCESS DISCLOSED IN THESE DRAWINGS. DRAWINGS MADE AVAILABLE FOR INFORMATION TO BIDDER ARE NOT TO BE USED FOR OTHER PURPOSES, AND ARE TO BE RETURNED UPON REQUEST OF THE FORWARDING CONTRACTOR.

P THIS DRAWING PRODUCED ON PRO-ENGINEER

THIS DOCUMENT CONTROLLED BY
CHANGE CONTROL SYSTEM 3
ENGINEERING PROCEDURE SNS-TS-G001

REV	CHANGE TYPE	CHANGE CONTROL SYSTEM	CHANGE REQUEST NUMBER	DESCRIPTION	BY	CHK	SECT	DEPT	DATE	PE	REQ	DOE	PJ
ROC	—	3	—	ISSUE FOR COMMENT AND INFORMATION	SMR				11/01				

REVISION OR ISSUE PURPOSE — REVISION APPROVALS

SCALE AS NOTED
TOLERANCES UNLESS OTHERWISE SPECIFIED
FRACTIONS :
XX DECIMALS ±.01
XXX DECIMALS ±.005
ANGLES ±0°15'
BREAK SHARP EDGES .06 MAX
FINISH 125 RMS UNLESS OTHERWISE SPECIFIED

DRAWING APPROVALS		DATE
DES	DMW/MEP	11/01
DRW	M.E.PHILLIPS	11/01
CHK	:	:
L3	:	:
L2	:	:
:	T.E. FORNEK	11/01

ornl Oak Ridge National Laboratory
operated for the DEPARTMENT OF ENERGY under U.S. GOVERNMENT contract DE-AC-05-84OR21400
Oak Ridge, Tennessee

SNS Spallation Neutron Source

SPALLATION NEUTRON SOURCE PROJECT
MULTI CORE VESSEL INSERT
MULTI C V INSERT W/ALIGNMENTS

BLDG	FL	SHT	OF	CLASS
8700	IST	1	2	U

107030600M8E8700A108 REV ROC

107030600M8E8700A108

NEXT ASS'Y:

FINAL ASS'Y:

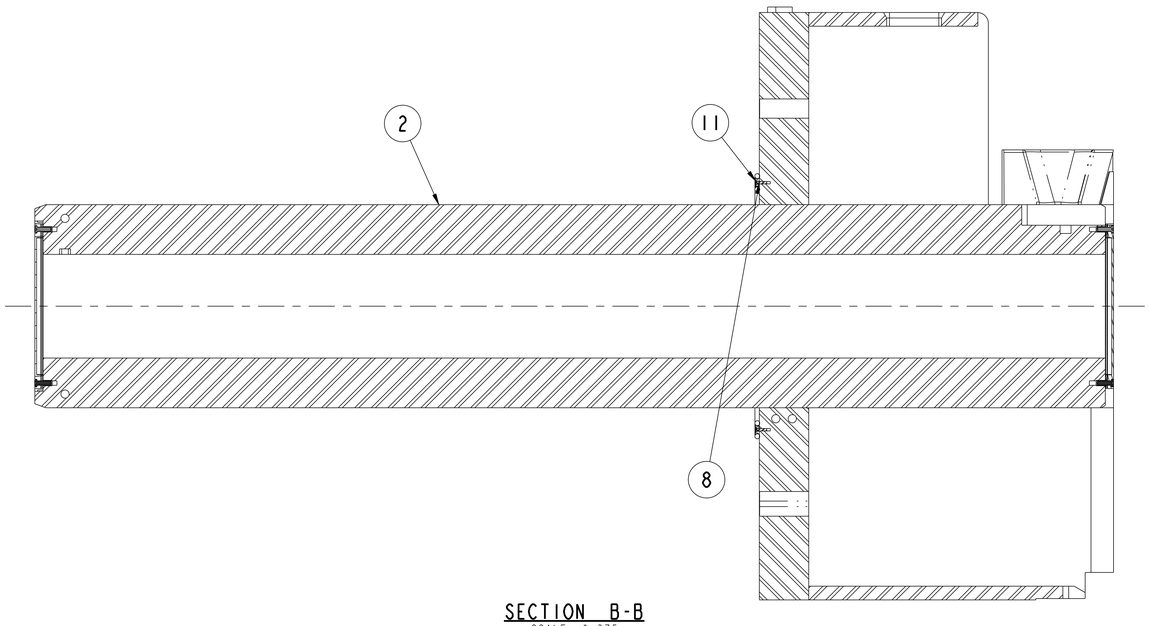

SECTION B-B
SCALE 0.375

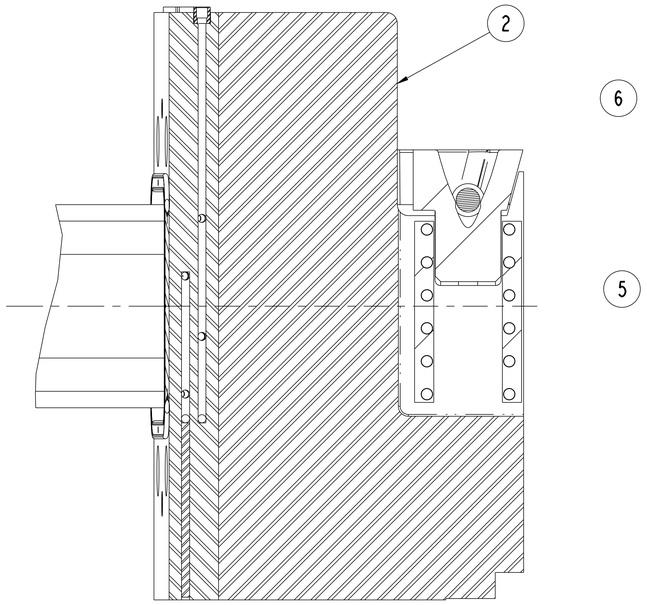

SECTION D-D
SCALE 0.375

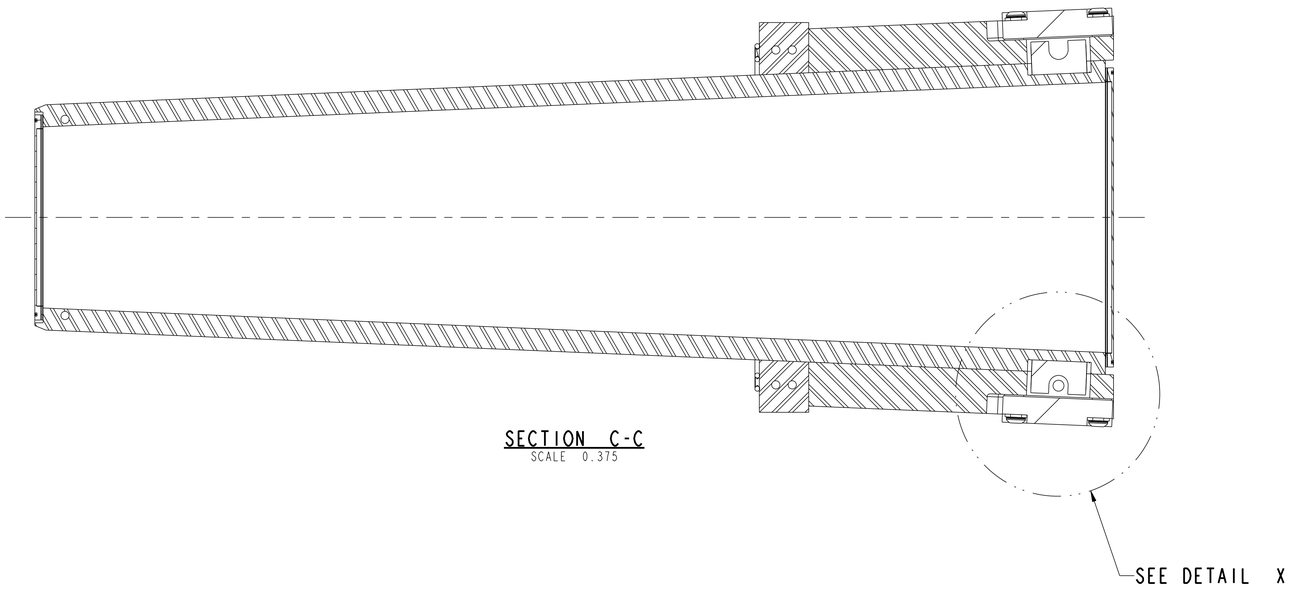

SECTION C-C
SCALE 0.375

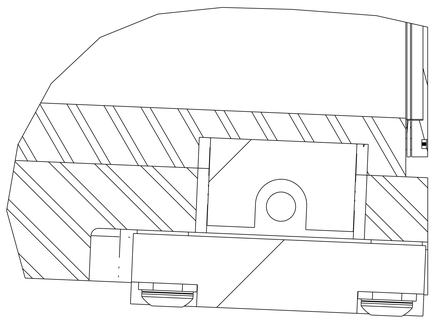

DETAIL X
SCALE 1.000

PRELIMINARY

NO REPRESENTATION OR WARRANTY,EXPRESSED OR IMPLIED,IS MADE AS TO THE ACCURACY, COMPLETENESS OR USEFULNESS OF THE INFORMATION OR STATEMENTS CONTAINED IN THESE DRAWINGS, OR THAT THE USE OR DISCLOSURE OF ANY INFORMATION, APPARATUS, METHOD OR PROCESS DISCLOSED IN THESE DRAWINGS MAY NOT INFRINGE PRIVATE RIGHTS OF OTHERS. NO LIABILITY IS ASSUMED WITH RESPECT TO THE USE OF, OR FOR DAMAGES RESULTING FROM THE USE OF, ANY INFORMATION, APPARATUS, METHOD OR PROCESS DISCLOSED IN THESE DRAWINGS. DRAWINGS MADE AVAILABLE FOR INFORMATION TO BIDDER ARE NOT TO BE USED FOR OTHER PURPOSES, AND ARE TO BE RETURNED UPON REQUEST OF THE FORWARDING CONTRACTOR.

P THIS DRAWING PRODUCED ON PRO-ENGINEER

SCALE AS NOTED

TOLERANCES UNLESS OTHERWISE SPECIFIED

FRACTIONS :
XX DECIMALS ±.01
XXX DECIMALS ±.005
ANGLES ±0°15'
BREAK SHARP EDGES .06 MAX
FINISH 125 RMS UNLESS OTHERWISE SPECIFIED

ornl Oak Ridge National Laboratory
operated for the DEPARTMENT OF ENERGY under U.S. GOVERNMENT contract DE-AC05-00OR22725
Oak Ridge, Tennessee

SNS Spallation Neutron Source

SPALLATION NEUTRON SOURCE PROJECT
MULTI CORE VESSEL INSERT
TOP PLATE

BLDG	FL	SHT	OF	CLASS
8700	1ST	2	2	U

I07030600M8E8700A108

REV R0C

I07030600M8E8700A108