NEXT ASS'Y: FINAL ASS'Y:

NOTES

1. INTERPRET DRAWING PER GLOBAL ENGINEERING DOCUMENTS DRAWING REQUIREMENTS MANUAL.
2. INTERPRET DIMENSIONS AND TOLERANCES PER ASME Y14.5M.
3. DIMENSIONS ARE IN INCHES.
4. INTERPRET WELDING AND NONDESTRUCTIVE EXAMINATION SYMBOLS PER AWS A2.4.
5. USE PROCEDURES, WELDERS, WELDING OPERATORS AND TACKERS QUALIFIED PER AWS D1.1.
6. DIMENSIONAL STABILITY OF SINGLE SHUTTER INSERT WELDMENT (FIND NO. 1) SHALL BE MAINTAINED THROUGH ALL MACHINING OPERATIONS. SELLER SHALL STRESS RELIEF SINGLE SHUTTER INSERT WELDMENT BY HEAT-TREATING AS REQUIRED TO ACCOMPLISH STABILITY. ALL DIMENSIONS APPLY AFTER STRESS RELIEF.
7. SINGLE SHUTTER INSERT WELDMENT (FIND NO. 1) SHALL BE NICKEL PLATED .0003 TO .0008 THICK. DIMENSIONS APPLY AFTER PLATING.
8. OPTIONAL CONSTRUCTION METHODS SHALL BE ALLOWED PER APPROVAL OF BUYER. SOME OPTIONAL METHODS ARE LISTED SUCH AS:
   a) ONE PIECE CONSTRUCTION. WHERE MULTIPLE PIECES ARE REPLACED WITH A MACHINED PIECE, PROVIDE CHAMFERS ±1/8" OF THE FILLET WELD SIZES AND 1/32" MINIMUM RADIUS OF THE RIGHT ANGLE BEVEL WELD SIZES.
   b) CONSTRUCTION FROM RECTANGULAR TUBING.
   c) CONSTRUCTION FROM FORGING.

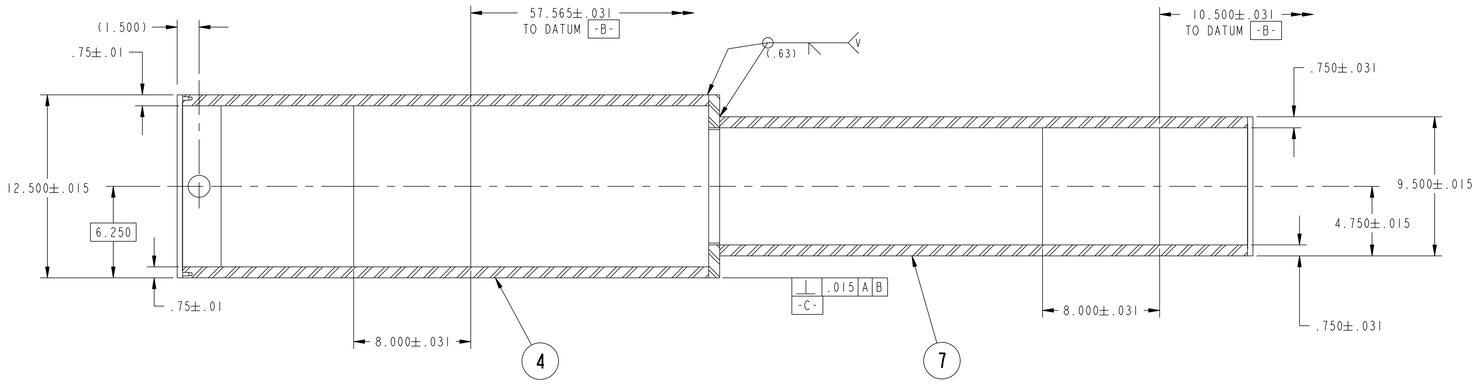

SECTION A-A

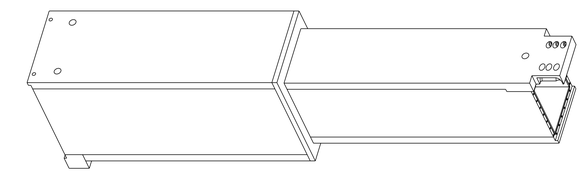

AUXILIARY VIEW
SCALE 0.125

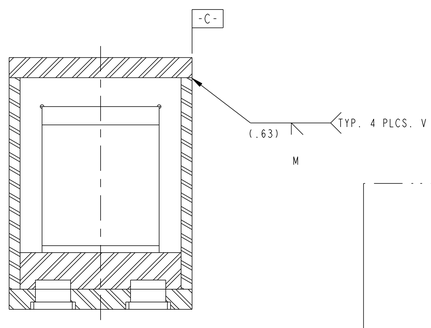

SECTION H-H

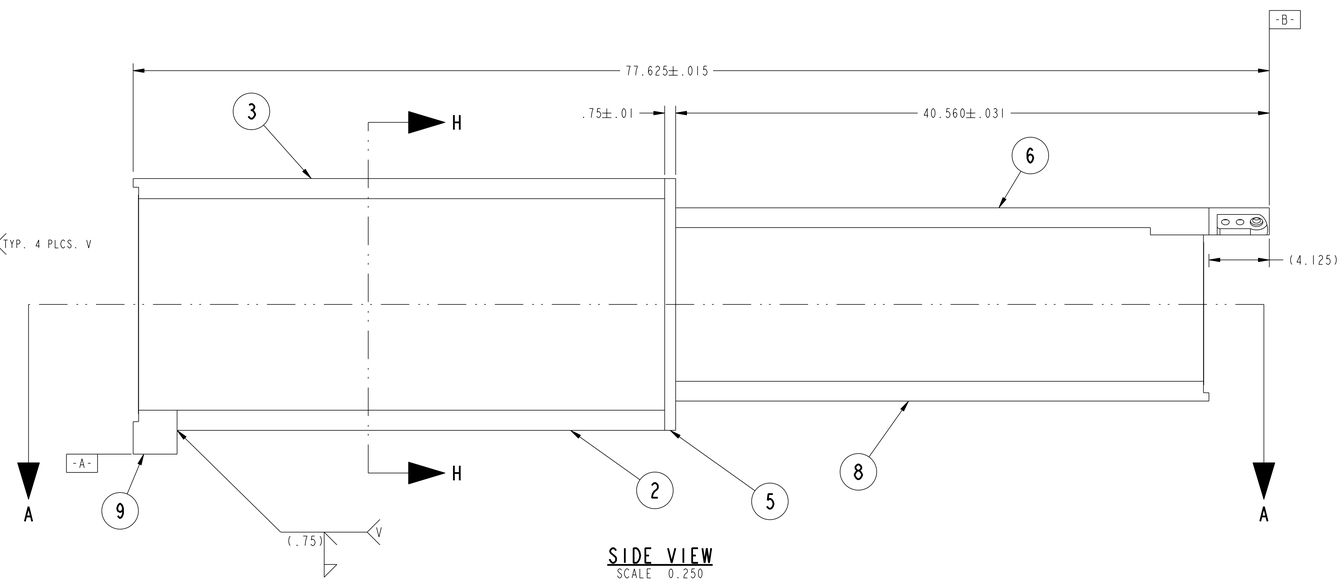

SIDE VIEW
SCALE 0.250

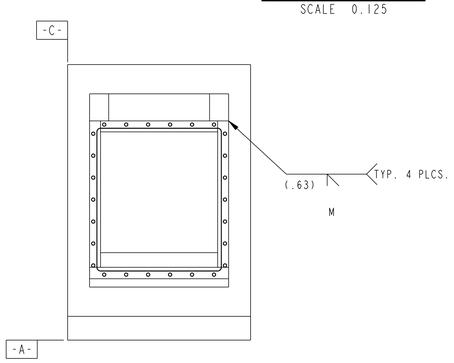

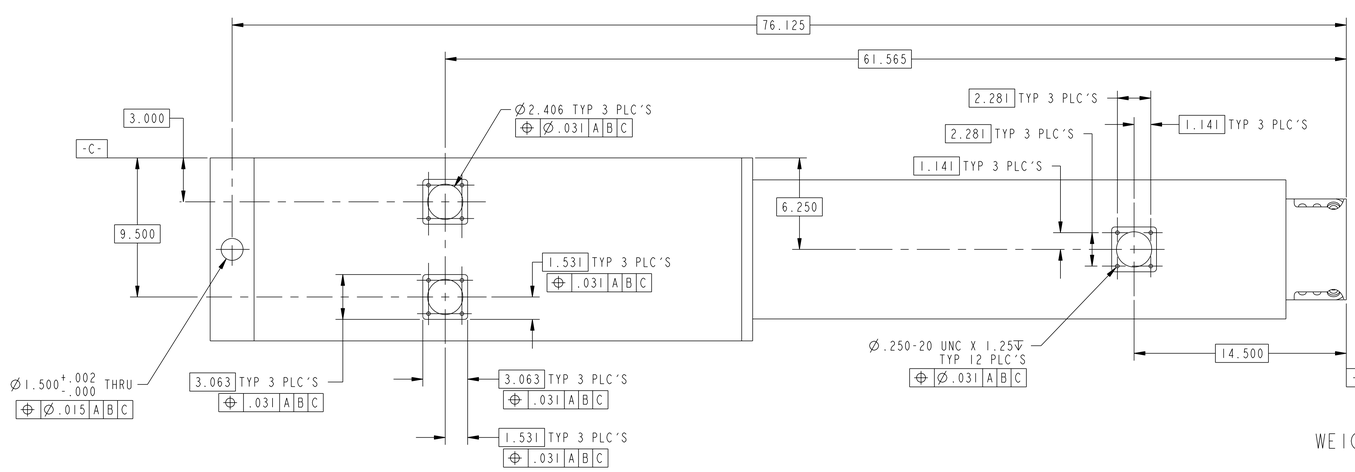

WEIGHT: APPROX. 1,176 LBS.

	1		107030600M8E8700A152-12	HOIST RINGS SUPPORT PLATE	---	---	12
	1		107030600M8E8700A152-11	FRONT BALL TRANSFER PLATE	---	---	11
	1		107030600M8E8700A152-10	REAR BALL TRANSFER PLATE	---	---	10
	1		107030600M8E8700A152-9	REAR BALL SUPPORT PLATE	---	---	9
	1		107030600M8E8700A152-8	END BOTTOM PLATE	---	---	8
	2		107030600M8E8700A152-7	END SIDE PLATE	---	---	7
	1		107030600M8E8700A152-6	END TOP PLATE	CARBON STEEL	ASTM A36	6
	1		107030600M8E8700A152-5	MID PLATE	---	---	5
	2		107030600M8E8700A152-4	SIDE PLATE	---	---	4
	1		107030600M8E8700A152-3	TOP BACK PLATE	---	---	3
	1		107030600M8E8700A152-2	BOTTOM BACK PLATE	---	---	2
4 5 6 7 8	1		107030600M8E8700A152-1	SINGLE SHUTTER INSERT WELD	---	---	1
A022-1	1	CAGE CODE	PART OR IDENTIFYING NO	NOMENCLATURE OR DESCRIPTION	MATERIAL	SPECIFICATION	FIND NO
		NEXT ASSEMBLY		PARTS LIST			

QUALITY VERIFICATION
MECHANICAL AND STRUCTURAL
REFERENCE SNS-QA-G002

QV CLAUSE	DOCUMENTS REQUIRED	APPLICABLE TO PART NO *
303	MATERIAL MILL TEST REPORT	-
325	MATERIAL SELLER CERT	-
326	SPECIAL MATERIAL INSPECTION REPORT	-
205	MANUFACTURING, INSPECTION, AND TEST PLAN	-
312	FIELD INSPECTION AND TEST PLAN	-
321	WELD AND BRAZE INSPECTION REPORT	-
322	HEAT TREAT REPORT (W/CHART)	-
310	LEAK TEST REPORT	-
315	CLEANING CERT	-
318	DEVIATION REQUEST	-
319	NONCONFORMANCE PROCESS	-
323	DIMENSIONAL REPORT	-
330	FUNCTIONAL TEST REPORT	-
100	DOCUMENTATION	-

* SYMBOL X INDICATES APPLICABLE TO ALL PARTS OR ITEMS

QA REP ..... DATE .....

RPE

REV. XX DATE XX/XX/XX

107030600M8E8700A152

PRELIMINARY

NO REPRESENTATION OR WARRANTY,EXPRESSED OR IMPLIED,IS MADE AS TO THE ACCURACY, COMPLETENESS OR USEFULNESS OF THE INFORMATION OR STATEMENTS CONTAINED IN THESE DRAWINGS, OR THAT THE USE OR DISCLOSURE OF ANY INFORMATION, APPARATUS, METHOD OR PROCESS DISCLOSED IN THESE DRAWINGS MAY NOT INFRINGE PRIVATE RIGHTS OF OTHERS. NO LIABILITY IS ASSUMED WITH RESPECT TO THE USE OF, OR FOR DAMAGES RESULTING FROM THE USE OF, ANY INFORMATION, APPARATUS, METHOD OR PROCESS DISCLOSED IN THESE DRAWINGS. DRAWINGS MADE AVAILABLE FOR INFORMATION TO BIDDER ARE NOT TO BE USED FOR OTHER PURPOSES, AND ARE TO BE RETURNED UPON REQUEST OF THE FORWARDING CONTRACTOR.

P THIS DRAWING PRODUCED ON PRO-ENGINEER

THIS DOCUMENT CONTROLLED BY
CHANGE CONTROL SYSTEM 3
ENGINEERING PROCEDURES SNS-TS-G001

REV	CHANGE TYPE	CHANGE CONTROL SYSTEM	CHANGE REQUEST NUMBER	DESCRIPTION	BY	CHK	SECT	DEPT	DATE	PE	REQ	DOE	PJ
00A	—	3	—	ISSUE FOR COMMENT AND INFORMATION	SMR				02/02				

REVISION OR ISSUE PURPOSE — REVISION APPROVALS

SCALE AS NOTED
TOLERANCES UNLESS OTHERWISE SPECIFIED
FRACTIONS :
XX DECIMALS ±.01
XXX DECIMALS ±.005
ANGLES ±0°15'
BREAK SHARP EDGES .06 MAX
FINISH 125 RMS UNLESS OTHERWISE SPECIFIED

DES	DMW/MEP	02/02
DRW	M.E.PHILLIPS	02/02
CHK		
L3		
L2		

DRAWING APPROVALS — DATE

ornl Oak Ridge National Laboratory
operated for the DEPARTMENT OF ENERGY under U.S. GOVERNMENT contract DE-AC-05-84OR21400
Oak Ridge, Tennessee

SNS Spallation Neutron Source

SPALLATION NEUTRON SOURCE PROJECT
FACILITY SHUTTER INTERFACE
SINGLE SHUTTER INSERT WELDMENT

BLDG	FL	SHT	OF	CLASS
8700	IST	1	3	U

107030600M8E8700A152 REV 00A

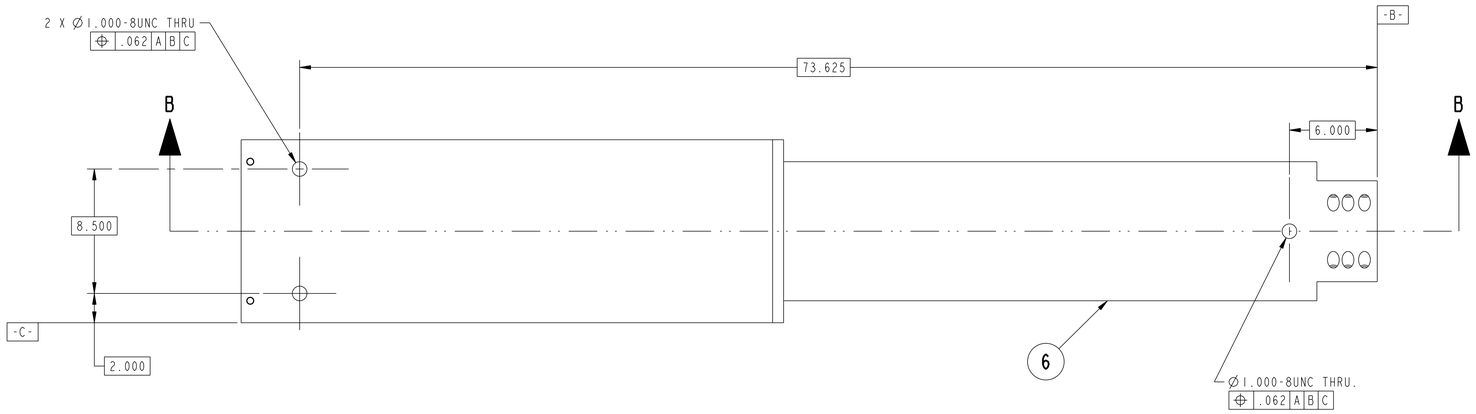

TOP VIEW
SCALE 0.250

Ø.2500 HOLE
Ø1.50 AND Ø2.00 HOLES

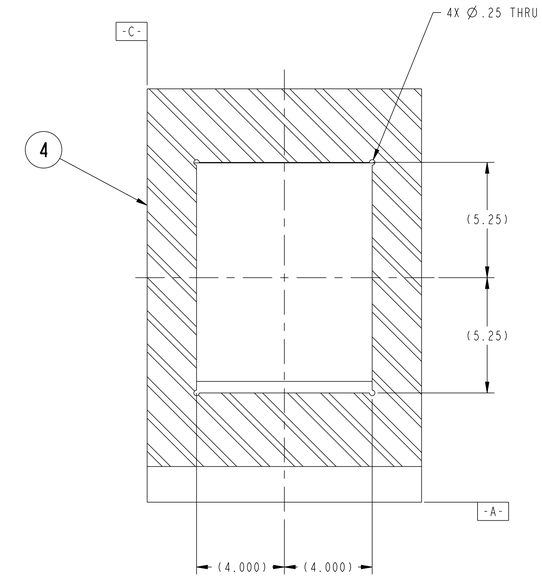

SECTION C-C
SCALE 0.375

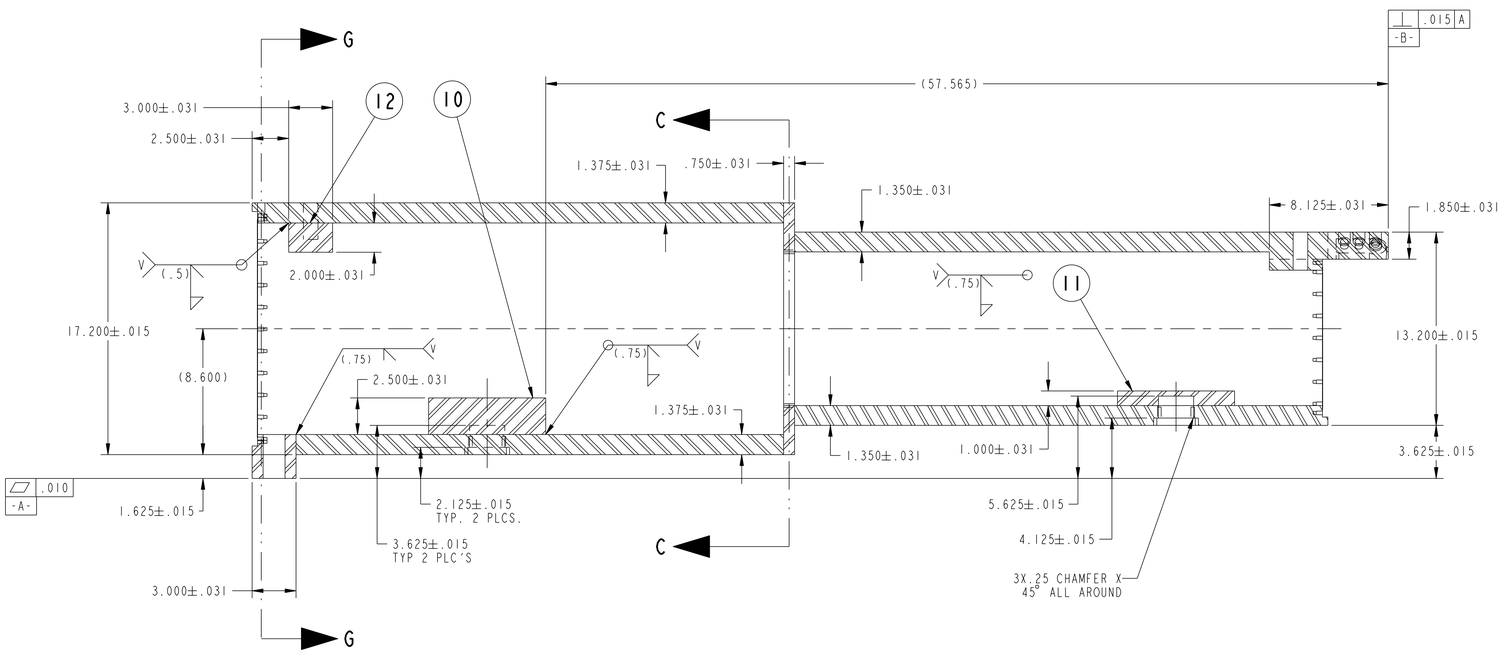

SECTION B-B

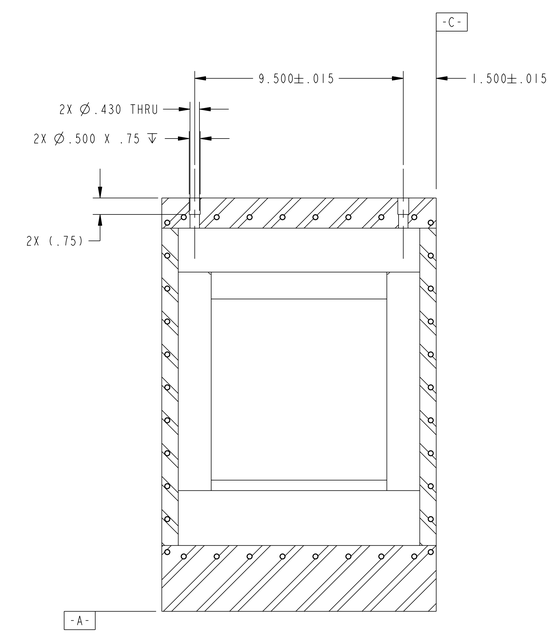

SECTION G-G
SCALE 0.375

PRELIMINARY

NO REPRESENTATION OR WARRANTY,EXPRESSED OR IMPLIED,IS MADE AS TO THE ACCURACY, COMPLETENESS OR USEFULNESS OF THE INFORMATION OR STATEMENTS CONTAINED IN THESE DRAWINGS, OR THAT THE USE OR DISCLOSURE OF ANY INFORMATION, APPARATUS, METHOD OR PROCESS DISCLOSED IN THESE DRAWINGS MAY NOT INFRINGE PRIVATE RIGHTS OF OTHERS. NO LIABILITY IS ASSUMED WITH RESPECT TO THE USE OF, OR FOR DAMAGES RESULTING FROM THE USE OF, ANY INFORMATION, APPARATUS, METHOD OR PROCESS DISCLOSED IN THESE DRAWINGS. DRAWINGS MADE AVAILABLE FOR INFORMATION TO BIDDER ARE NOT TO BE USED FOR OTHER PURPOSES, AND ARE TO BE RETURNED UPON REQUEST OF THE FORWARDING CONTRACTOR.

P THIS DRAWING PRODUCED ON PRO-ENGINEER

SCALE AS NOTED

TOLERANCES UNLESS OTHERWISE SPECIFIED
FRACTIONS ±
XX DECIMALS ±.01
XXX DECIMALS ±.005
ANGLES ±0°15'
BREAK SHARP EDGES .06 MAX
FINISH 125 RMS UNLESS OTHERWISE SPECIFIED

ornl Oak Ridge National Laboratory
operated for the DEPARTMENT OF ENERGY under U.S. GOVERNMENT contract DE-AC05-00OR22725
Oak Ridge, Tennessee

SNS Spallation Neutron Source

SPALLATION NEUTRON SOURCE PROJECT
FACILITY SHUTTER INTERFACE
SINGLE SHUTTER INSERT WELDMENT

BLDG	FL	SHT	OF	CLASS
8700	1ST	2	3	U

I07030600M8E8700A152 REV 00A

I07030600M8E8700A152

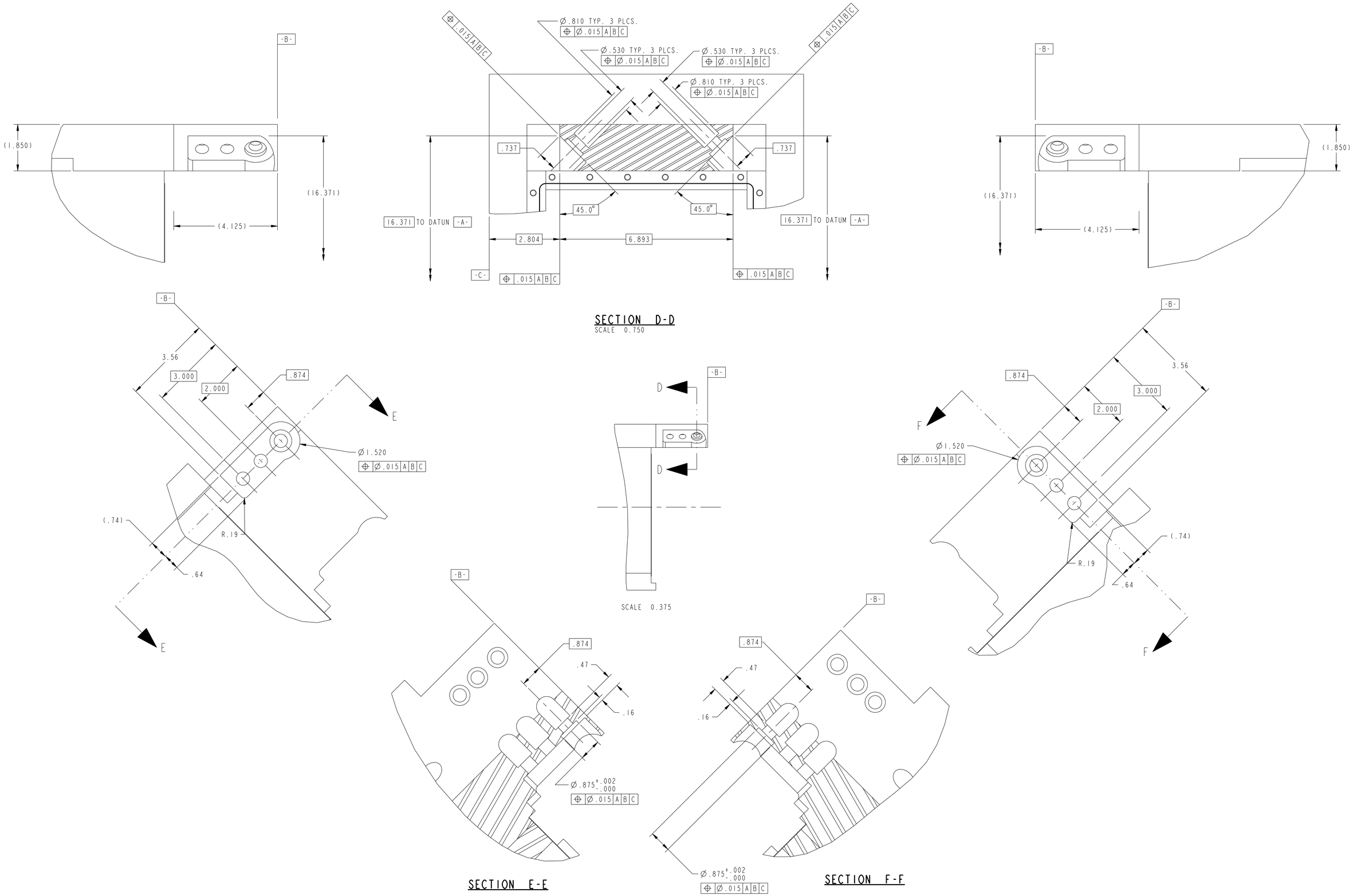

PRELIMINARY

NO REPRESENTATION OR WARRANTY,EXPRESSED OR IMPLIED,IS MADE AS TO THE ACCURACY, COMPLETENESS OR USEFULNESS OF THE INFORMATION OR STATEMENTS CONTAINED IN THESE DRAWINGS, OR THAT THE USE OR DISCLOSURE OF ANY INFORMATION, APPARATUS, METHOD OR PROCESS DISCLOSED IN THESE DRAWINGS MAY NOT INFRINGE PRIVATE RIGHTS OF OTHERS. NO LIABILITY IS ASSUMED WITH RESPECT TO THE USE OF, OR FOR DAMAGES RESULTING FROM THE USE OF, ANY INFORMATION, APPARATUS, METHOD OR PROCESS DISCLOSED IN THESE DRAWINGS. DRAWINGS MADE AVAILABLE FOR INFORMATION TO BIDDER ARE NOT TO BE USED FOR OTHER PURPOSES, AND ARE TO BE RETURNED UPON REQUEST OF THE FORWARDING CONTRACTOR.

P THIS DRAWING PRODUCED ON PRO-ENGINEER

SCALE AS NOTED

TOLERANCES UNLESS OTHERWISE SPECIFIED

FRACTIONS :
XX DECIMALS ±.01
XXX DECIMALS ±.005
ANGLES ±0°15'
BREAK SHARP EDGES .06 MAX
FINISH 125 RMS UNLESS OTHERWISE SPECIFIED

ornl Oak Ridge National Laboratory
operated for the DEPARTMENT OF ENERGY under U.S. GOVERNMENT contract DE-AC05-00OR22725
Oak Ridge, Tennessee

SNS Spallation Neutron Source

SPALLATION NEUTRON SOURCE PROJECT
FACILITY SHUTTER INTERFACE
SINGLE SHUTTER INSERT WELDMENT

BLDG	FL	SHT	OF	CLASS
8700	1ST	3	3	U

107030600M8E8700A152 REV 00A

NEXT ASS'Y: FINAL ASS'Y:

107030600M8E8700A152