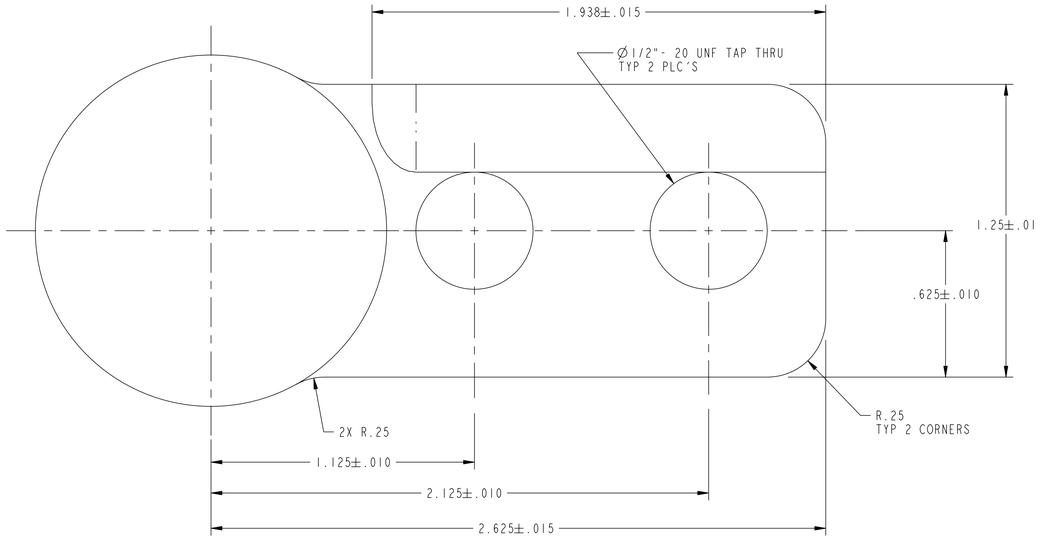

PLAN VIEW

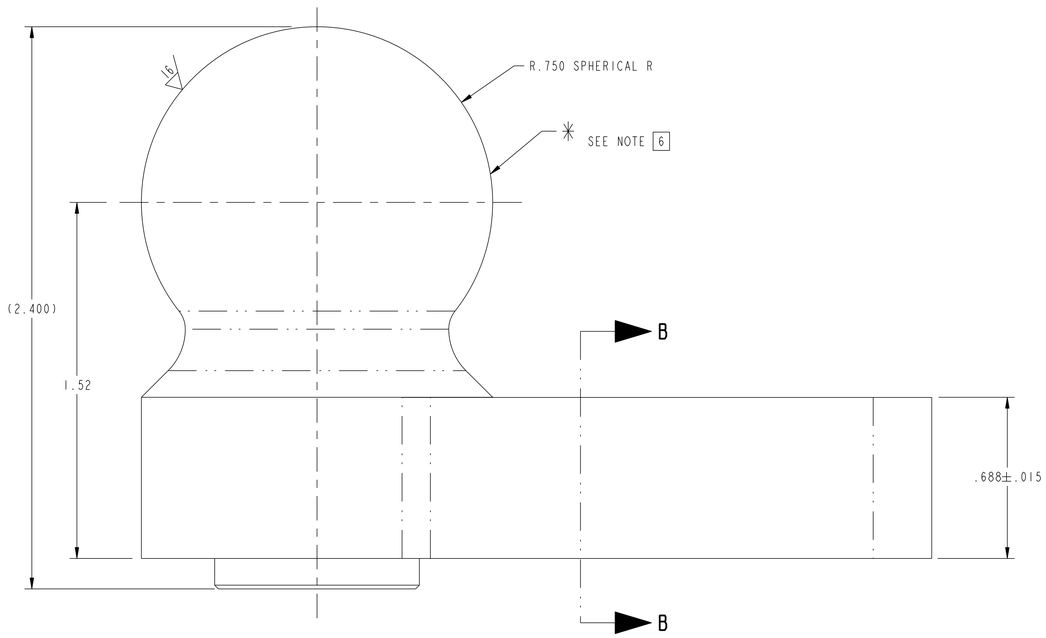

FRONT ELEVATION VIEW

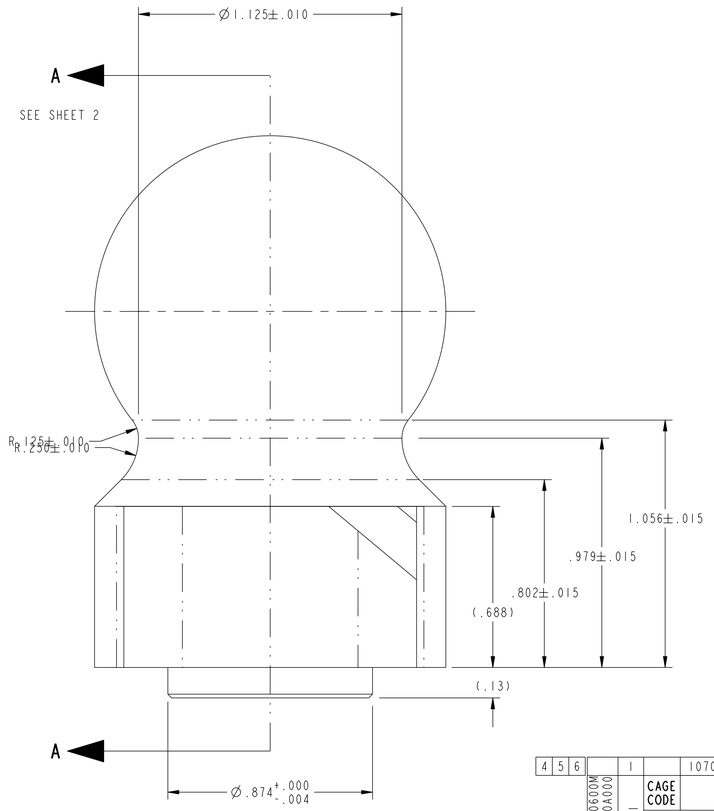

FRONT VIEW
SCALE 4.000

NOTES

1. INTERPRET DRAWING PER GLOBAL ENGINEERING DOCUMENTS DRAWING REQUIREMENTS MANUAL.
2. INTERPRET DIMENSIONS AND TOLERANCES PER ASME Y14.5M.
3. DIMENSIONS ARE IN INCHES.
4. FRONT ALIGNMENT BALL SHALL BE THROUGH HARDENED TO HRC 42 TO 45.
5. FRONT ALIGNMENT BALL SHALL BE NICKEL PLATED 0.0003 TO 0.0008 THICK.
6. COAT ALL SURFACES OF FRONT ALIGNMENT BALL DETAIL, FIND NUMBER 1, THAT ARE DENOTED BY AN * WITH DICRONITE DL-5 DRY FILM LUBRICATION. DRY FILM LUBRICATION COATING MUST BE APPLIED AT THE VENDOR'S PROCESSING FACILITY IN ACCORDANCE TO VENDOR'S REQUIREMENTS. DICRONITE DRY LUBE, SOUTHEAST, 1868-A CANDY LANE S.W. MARIETTA, GA 30008.

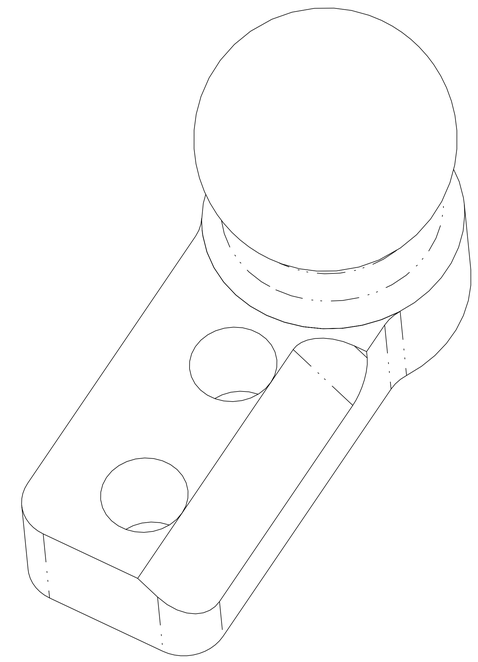

PICTORIAL VIEW
SCALE 3.000

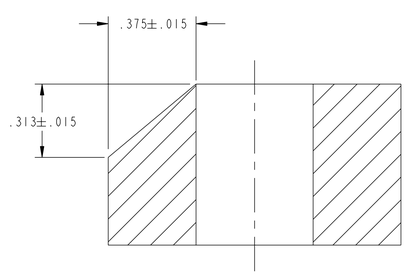

SECTION B-B
SCALE 4.000

4	5	6		1		107030600M8E8700A155-1	RIGHT FRONT ALIGNMENT BALL	ALLOY STEEL	AISI 4340	1
			107030600M8E8700A000	-1	CAGE CODE	PART OR IDENTIFYING NO	NOMENCLATURE OR DESCRIPTION	MATERIAL	SPECIFICATION	FIND NO
					NEXT ASSEMBLY		PARTS LIST			

QUALITY VERIFICATION
MECHANICAL AND STRUCTURAL
REFERENCE SNS-TS-G002

QV CLAUSE	DOCUMENTS REQUIRED	APPLICABLE TO PART NO *
303	MATERIAL MILL TEST REPORT	-
325	MATERIAL SELLER CERT	-
326	SPECIAL MATERIAL INSPECTION REPORT	-
205	MANUFACTURING, INSPECTION, AND TEST PLAN	-
312	FIELD INSPECTION AND TEST PLAN	-
321	WELD AND BRAZE INSPECTION REPORT	-
322	HEAT TREAT REPORT (W/CHART)	-
310	LEAK TEST REPORT	-
315	CLEANING CERT	-
318	DEVIATION REQUEST	-
319	NONCONFORMANCE PROCESS	-
323	DIMENSIONAL REPORT	-
330	FUNCTIONAL TEST REPORT	-
:	:	:
:	:	:
:	:	:
:	:	:
:	:	:
:	:	:
100	DOCUMENTATION	-

* SYMBOL X INDICATES APPLICABLE TO ALL PARTS OR ITEMS

QA REP ..... DATE .....

RPE

REV. XX DATE XX/XX/XX

107030600M8E8700A155

NO REPRESENTATION OR WARRANTY,EXPRESSED OR IMPLIED,IS MADE AS TO THE ACCURACY, COMPLETENESS OR USEFULNESS OF THE INFORMATION OR STATEMENTS CONTAINED IN THESE DRAWINGS, OR THAT THE USE OR DISCLOSURE OF ANY INFORMATION, APPARATUS, METHOD OR PROCESS DISCLOSED IN THESE DRAWINGS MAY NOT INFRINGE PRIVATE RIGHTS OF OTHERS. NO LIABILITY IS ASSUMED WITH RESPECT TO THE USE OF, OR FOR DAMAGES RESULTING FROM THE USE OF, ANY INFORMATION, APPARATUS, METHOD OR PROCESS DISCLOSED IN THESE DRAWINGS. DRAWINGS MADE AVAILABLE FOR INFORMATION TO BIDDER ARE NOT TO BE USED FOR OTHER PURPOSES, AND ARE TO BE RETURNED UPON REQUEST OF THE FORWARDING CONTRACTOR.

P THIS DRAWING PRODUCED ON PRO-ENGINEER

THIS DOCUMENT CONTROLLED BY
CHANGE CONTROL SYSTEM 3
SNS PROCEDURE SNS-TS-G001

REV	CHANGE TYPE	CHANGE CONTROL SYSTEM	CHANGE REQUEST NUMBER	DESCRIPTION	BY	CHK	SECT	DEPT	DATE	PE	REQ	DOE	PJ
00A	—	3	—	ISSUE FOR COMMENT AND INFORMATION	SMR				02/02				

REVISION OR ISSUE PURPOSE — REVISION APPROVALS

SCALE AS NOTED

TOLERANCES UNLESS OTHERWISE SPECIFIED
FRACTIONS :
XX DECIMALS ±.01
XXX DECIMALS ±.005
ANGLES ±0°15'
BREAK SHARP EDGES .06 MAX
FINISH 32 RMS UNLESS OTHERWISE SPECIFIED

DRAWING APPROVALS		DATE
DES	DMW/MEP	02/02
DRW	M.E.PHILLIPS	02/02
CHK	:	:
L3	:	:
L2	:	:
:	T.E. FORNEK	02/02
:	:	:
:	:	:
:	:	:
:	:	:
:	:	:
:	:	:

ornl Oak Ridge National Laboratory
operated for the DEPARTMENT OF ENERGY under U.S. GOVERNMENT contract DE-AC05-00OR22725
Oak Ridge, Tennessee

SNS Spallation Neutron Source

SPALLATION NEUTRON SOURCE PROJECT
SINGLE SHUTTER INSERT
RIGHT FRONT ALIGNMENT BALL

BLDG	FL	SHT	OF	CLASS
8700	1ST	1	2	U

107030600M8E8700A155 REV 00A

NEXT ASS'Y: | FINAL ASS'Y:

NOTES

1. SEE SHEET 1 FOR NOTES AND LIST OF MATERIALS.

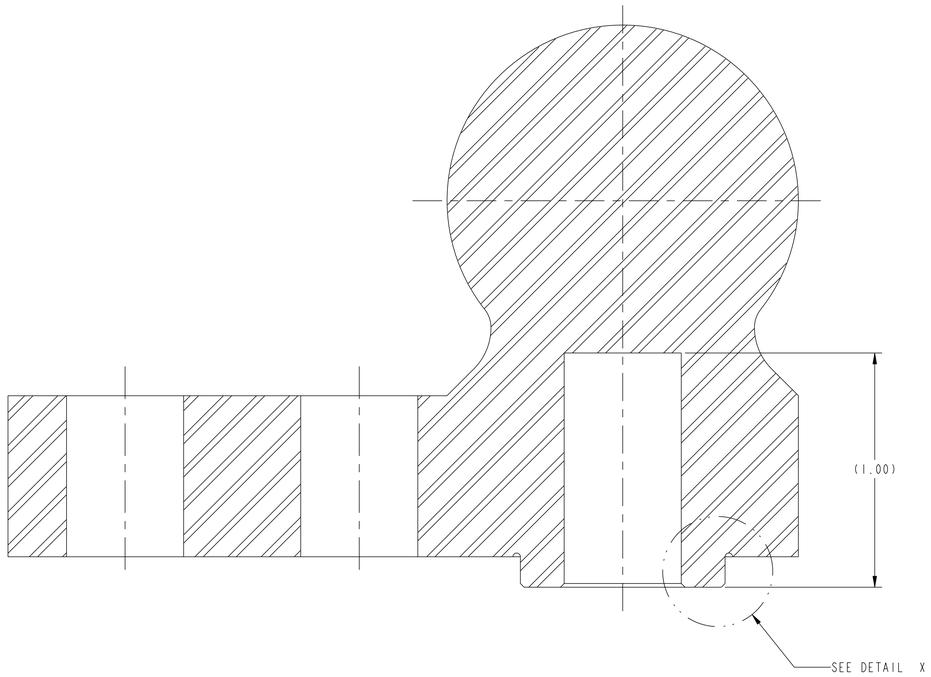

SECTION A-A
SCALE 4.000

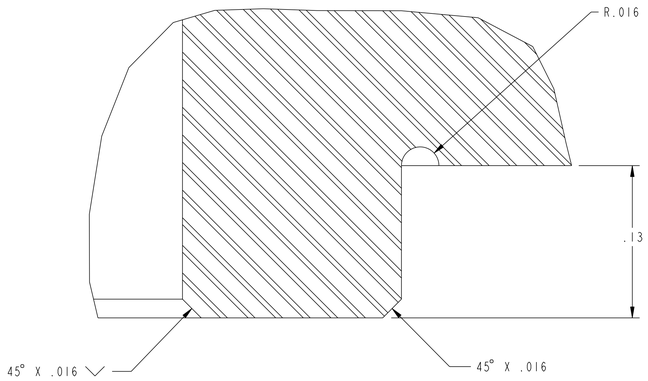

DETAIL X
SCALE 20.000

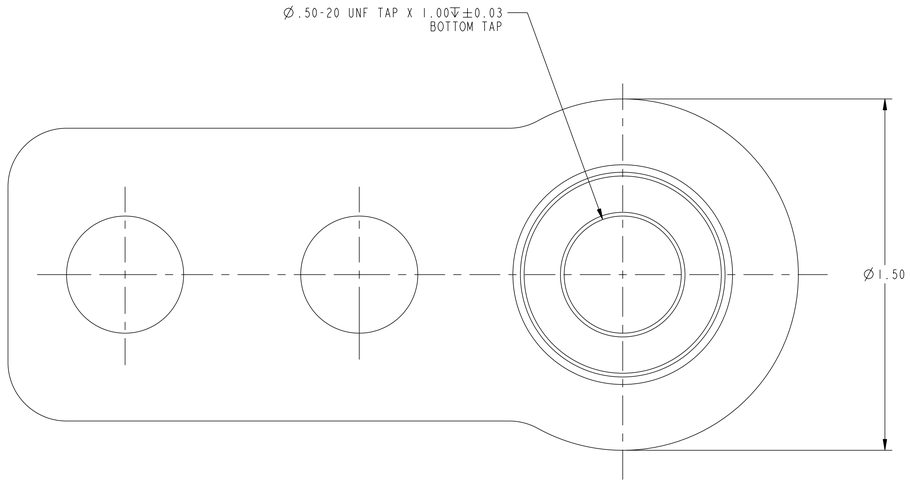

BOTTOM VIEW

RPE

REV. XX DATE XX/XX/XX

I07030600M8E8700A155

NO REPRESENTATION OR WARRANTY,EXPRESSED OR IMPLIED,IS MADE AS TO THE ACCURACY, COMPLETENESS OR USEFULNESS OF THE INFORMATION OR STATEMENTS CONTAINED IN THESE DRAWINGS, OR THAT THE USE OR DISCLOSURE OF ANY INFORMATION, APPARATUS, METHOD OR PROCESS DISCLOSED IN THESE DRAWINGS MAY NOT INFRINGE PRIVATE RIGHTS OF OTHERS. NO LIABILITY IS ASSUMED WITH RESPECT TO THE USE OF, OR FOR DAMAGES RESULTING FROM THE USE OF, ANY INFORMATION, APPARATUS, METHOD OR PROCESS DISCLOSED IN THESE DRAWINGS. DRAWINGS MADE AVAILABLE FOR INFORMATION TO BIDDER ARE NOT TO BE USED FOR OTHER PURPOSES, AND ARE TO BE RETURNED UPON REQUEST OF THE FORWARDING CONTRACTOR.

P THIS DRAWING PRODUCED ON PRO-ENGINEER

THIS DOCUMENT CONTROLLED BY
CHANGE CONTROL SYSTEM___XXXX___
ENGINEERING PROCEDURE___XXXX___

REV	CHANGE TYPE	CHANGE CONTROL SYSTEM	CHANGE NOTICE NUMBER	DESCRIPTION	BY	CHK	SECT	DEPT	DATE	PE	REQ	DOE
				REVISION OR ISSUE PURPOSE					REVISION APPROVALS			

SCALE AS NOTED

TOLERANCES UNLESS OTHERWISE SPECIFIED
FRACTIONS :
XX DECIMALS ±.01
XXX DECIMALS ±.005
ANGLES ±0°15'
BREAK SHARP EDGES .06 MAX
FINISH 32 RMS UNLESS OTHERWISE SPECIFIED

DRAWING APPROVALS		DATE
DES	DMW/MEP	02/02
DRW	M.E.PHILLIPS	02/02
CHK	:	:
L3	:	:
L2	:	:
:	:	:
:	:	:
:	:	:
:	:	:
:	:	:
:	:	:
:	:	:

ornl Oak Ridge National Laboratory
operated for the DEPARTMENT OF ENERGY under U.S. GOVERNMENT contract DE-AC-05-84OR21400
Oak Ridge, Tennessee

SNS Spallation Neutron Source

SPALLATION NEUTRON SOURCE PROJECT
SINGLE SHUTTER INSERT
RIGHT FRONT ALIGNMENT BALL DETAIL

BLDG	FL	SHT	OF	CLASS
8700	1ST	2	2	U

I07030600M8E8700A155 REV 00A